ASM 105S, 115S F132: Damper actuator with SAUTER Universal Technology (SUT)



ASM105SF132



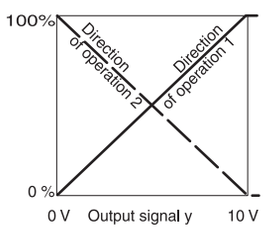

How energy efficiency is improved

Torque-dependent cut-off facility for efficient usage of energy

Features

- For controllers with switching (2- and 3-point) or continuous output (0…10 V)
- Self-centring spindle adapter
- Gear unit can be disengaged to position the damper and for manual adjustment
- Stepping motor with electronic activation and cut-out
- Maintenance-free
- Intelligent adaptation of rotation angle, incl. feedback adjustment
- Free configuration using the CASE Drive PC tool
- Suitable for all fitting positions

Technical data

Power supply		
	Power supply 24 V~	±20%, 51...60 Hz
	Power supply 24 V=	±20%
Parameters		
	Angle of rotation	Max. 95°
	Admissible damper shaft	Ø 8...16 mm, □ 6,5...12.5 mm
	Admissible damper shaft (hardness)	Max. 300 HV
	Operating noise	< 30 dB (A)
	Response time	200 ms
Positioner	Control signal y	0...10 V, R_i > 100 kΩ
	Positional feedback signal y_0	0...10 V; load > 10 kΩ
	Starting point U_0	0 or 10 V
	Control span ΔU	10 V
	Switching range X_{sh}	200 mV
Ambient conditions		
	Admissible ambient temperature	–20...55 °C
	Admissible ambient humidity	< 95% rh, no condensation
Construction		
	Weight	0.7 kg
	Housing	Lower section black, upper section yellow
	Housing material	Fire-retardant plastic
	Power cable	1.2 m long, 5 × 0.5 mm²
Standards and directives		
	Type of protection	IP54 (EN 60529)
	Protection class	III (IEC 60730)
CE conformity	EMC Directive 2014/30/EU	EN 61000-6-1 EN 61000-6-3 EN 61000-6-4
	Directive 2006/95/EC	EN 1050

Overview of types

Type	Rotational torque and holding torque (Nm)	Running time for 90°	Power consumption
ASM105SF132	5	35/60/120 s	5.0 W, 9.0 VA
ASM115SF132	10	60/120 s	4.8 W, 8.7 VA

Right of amendment reserved © 2019 Fr. Sauter AG

Accessories	
Type	Description
0313529001	Split-range unit for adjusting sequences, fitted in separate junction box
0361977002	Assembly materials for M3R, M4R, MH32R/F, MH42R with ASM 105, 115
0372145001	Auxiliary change-over contacts, single
0372145002	Auxiliary change-over contacts, double
0372286001	Potentiometer, 130 Ω
0372286002	Potentiometer, 1000 Ω
0372286003	Potentiometer, 5000 Ω
0372300001	Torsion protection, long (230 mm)
0372301001	Spindle adaptor for squared end hollow profile (x 15 mm), pack of 10 pcs.
0372320001	Hexagon key as visualisation for position indicator
0372462001	CASE Drives PC tool for configuring the drives by computer

Auxiliary change-over contacts: Infinitely variable 0...90°, admissible load 5(2) A, 24...230 V

Potentiometers: Only one potentiometer or one set of auxiliary contacts can be fitted for each actuator

Description of operation

Depending on the type of connection (see connection diagram), the actuator can be used as a continuous 0...10 V, 2-point (OPEN/CLOSE) or 3-point actuator (OPEN/STOP/CLOSE) with an intermediate position. The running time of the actuator can be set with switches S1 and S2 according to requirements.
The manual adjustment is performed by releasing the gear unit using the adjuster beside the connection cable and simultaneously adjusting the spindle adaptor.

Intended use

This product is only suitable for the purpose intended by the manufacturer, as described in the “Description of operation” section.
All related product regulations must also be adhered to. Changing or converting the product is not admissible.

Additional technical data

The upper section of the housing with the cover, indicator knob and cover knob contains the stepping motor and the SUT electronics.
The lower section of the housing contains the maintenance-free gear unit, the gear-release lever and the spindle adaptor.

Auxiliary change-over contacts

Switch rating max. 230 V AC, current min. 20 mA at 20 V
Switch rating max. 4...30 V DC, current min. 1...100 mA

Power consumption

Type	Running time [s]	Status	Active power [W]	Apparent power S [VA]
ASM 105S F132	35	Operation	2.8	5.3
		Standstill	1.6	3.2
	60	Operation	5.0	9.0
		Standstill	1.6	3.2
	120	Operation	2.4	4.5
		Standstill	1.6	3.2
ASM 115S F132	60	Operation	4.8	8.7
		Standstill	1.5	3.0
	120	Operation	3.5	6.5
		Standstill	1.5	3.0

Connection as 2-point control unit

This OPEN/CLOSE activation can be performed via 2 cables. The actuator is connected to the voltage via the blue and brown cables. The damper actuator is moved to the end position by connecting the voltage to the black cable (clockwise direction to 100% angle of rotation). After the voltage is switched off, the actuator moves to the opposite end position. The unused red and grey wires must not be connected or come into contact with other cables. We recommend that you insulate these.

SAUTER Right of amendment reserved © 2019 Fr. Sauter AG

Connection as 3-point control unit

When voltage is applied to the cable (brown or black), the damper actuator can be moved to any desired position. Direction of rotation (viewing the spindle adaptor from the actuator):

- The spindle adaptor turns in the clockwise direction, with the voltage on the black cable.
- The spindle adaptor turns in the anti-clockwise direction, with voltage on the brown cable.

In the end positions (limit stop of damper, limit stop due to angle-of-rotation limit, max. angle of rotation of 95° reached) or in the case of an overload, the electronic motor cut-off is activated (no limit switches). Direction of rotation changed by transposing the connections.
The unused red and grey wires must not be connected or come into contact with other cables. We recommend that you insulate these.

Connection for control voltage 0...10 V

The built-in positioner controls the actuator depending on controller's output signal y.
Direction of rotation (viewing the spindle adaptor from the actuator):
Direction of operation 1 (mains power supply on brown cable):
When the positioning signal is increasing, the spindle adaptor turns in the clockwise direction
Direction of operation 2 (mains power supply on black cable):
When the positioning signal is increasing, the spindle adaptor turns in the anti-clockwise direction
The starting point and the control span are fixed.
Depending on the direction of operation, only the brown cable or the black cable may be connected. The other cable must be insulated.
When the voltage is connected, the stepping motor moves to the two end stops one after the other, and determines its effective angle of rotation. Thanks to the electronics, no steps can be lost, and the actuator does not require periodic re-adjustment. In the case of a power failure longer than at least 5 min, or directly after manual adjustment, the actuator automatically readjusts itself. When the angle of rotation is changed, the manual adjuster must be used to trigger a new adjustment so that the actuator, the control voltage 0...10 V and the feedback signal adjust to the new angle of rotation. Switch S3 can be used to switch off the automatic initialisation. The positioning motor now works in the manual or controlled initialisation mode and must be manually moved to the end stops by the controller output signal, or it is automatically moved to the end stops by the control behaviour in the control loop. If it detects a new limit stop, this is saved and the feedback signal is adjusted accordingly. Then the current position is calculated and output.
When control signal 0…10 V is interrupted and direction of operation 1 is connected, the damper is closed completely (0% position).

Coding switch

ASM 105S 90°	ASM 115S 90°	S1	S2	S3
120s	120s	OFF	ON	-
120s	120s	ON	ON	-
60s	60s	ON	OFF	-
35s	60s	OFF	OFF	-
Initialisation on		-	-	ON
Initialisation off		-	-	OFF
Factory setting position		ON	ON	ON

CASE Drives PC Tool, accessory 0372462 001
CASE Drives allows you to set and read the actuator parameters on site. The connection is via a serial port on the PC (laptop) and a socket on the actuator. The set consists of: The software including installation and operating manual, fitting instructions, connection plug, cable (1.2 m long) and interface converter for the PC. The application is designed for commissioning and service engineers as well as experienced operators.
The last setting has priority, whether made with the coding switch or CASE Drives. When a changeover is made with the coding switch, this setting is active. In order that the settings made with CASE Drives cannot be overwritten, the coding switch must be removed before the setting with CASE Drives (delivery includes special tool).
Split-range unit, accessory 0361529 001
Starting point U0 and control span ΔU can be set with the potentiometer. In this way, several control units can be operated in sequence or cascade by the control signal of the controller. The input signal

 Right of amendment reserved © 2019 Fr. Sauter AG

(partial range) is amplified into an output signal of 0...10V. This accessory cannot be built into the actuator but must be externally housed in an electrical junction box.

Engineering and fitting notes

The concept of stepping motor and electronics enables electrical parallel operation of multiple air dampers with different torques when actuators of the same SUT type are used. The actuator can be installed in any position (including a hanging position). It is plugged directly onto the damper spindle and clipped to the anti-torsion device. The self-centring spindle adapter protects the damper spindle. The damper actuator can be detached from the damper spindle very easily without removing the anti-torsion device.
The coding switches are accessible via an opening with a black cover in the housing lid.
The angle of rotation can be limited on the device to between 0° and 90° and continuously adjusted between 5° and 80°. The limit is fixed using a set screw directly on the actuator and the limit stop on the self-centring spindle adapter. The self-centring spindle adapter is suitable for Ø 8...16 mm and □ 6.5...12.7 mm damper spindles.
The maximum accessory equipment for an actuator is 1 auxiliary change-over contact (single or double).
The auxiliary contact accessory is screwed onto the top cover of the actuator. To be able to make the mechanical connection, you first have to remove the indicator knob. A new indicator can be seen on the cover of the accessory.

Beware of injury
When the housing is opened, there is a risk of injury due to the return spring.
►The housing must not be opened.

Outdoor installation

We recommend protecting the devices from the weather if they are installed outside buildings.

Disposal

When disposing of the product, observe the currently applicable local laws.
More information on materials can be found in the Declaration on materials and the environment for this product.

Connection diagram

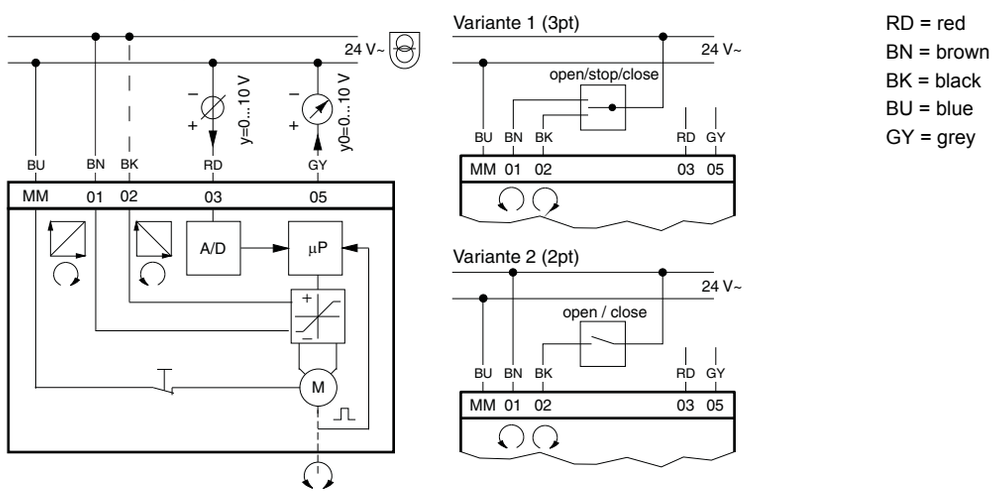

Direction of operation 1:
01 closed, 02 open
Direction of operation 2:
02 closed, 01 open

SAUTER Right of amendment reserved © 2019 Fr. Sauter AG

Accessories

372145 001

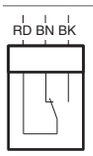

372145 002

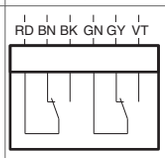

0372286

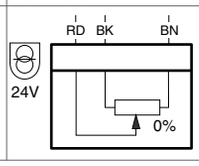

0313529

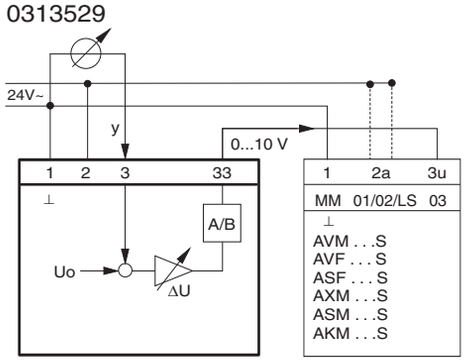

Dimension drawing

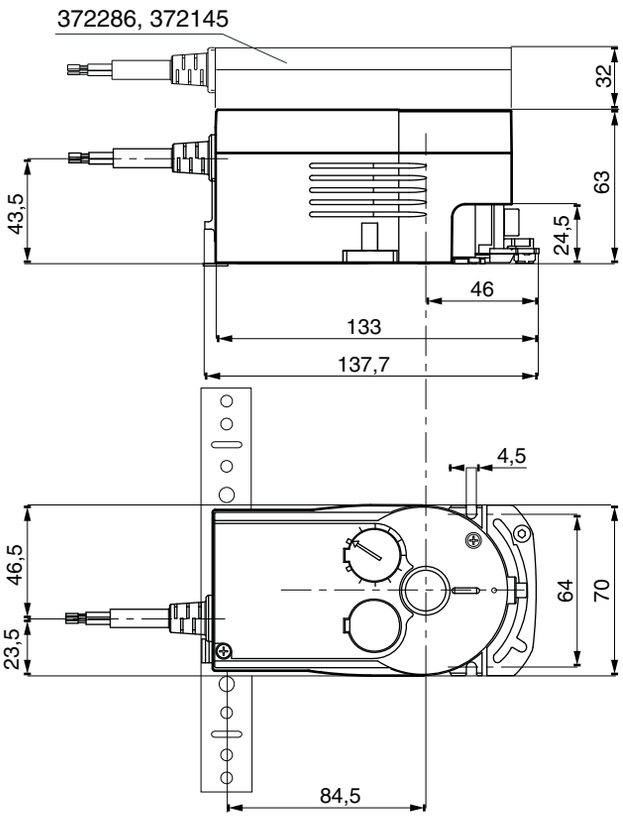

Fr. Sauter AG
Im Surinam 55
CH-4058 Basel
Tel. +41 61 - 695 55 55
www.sauter-controls.com

SAUTER **Right of amendment reserved © 2019 Fr. Sauter AG**