ifm electronic

CE

Operating instructions
Control monitor for temperature sensors

efector600

TR2439

UK

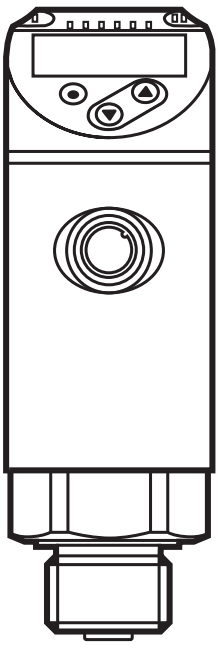

80231576 / 00 10 / 2015

Contents

1 Safety instructions 3

2 Functions and features 3

3 Function 4
3.1 Switching function 4
3.2 Analogue function 5
3.2.1 Current output 5
3.2.2 Voltage output 6
3.3 Display colour change 7
3.3.1 Parameter r1ou, G1ou 7
3.3.2 Parameter r-cF, G-cF 8
3.4 IO-Link 8
3.4.1 General information 8
3.4.2 Device-specific information 8
3.4.3 Parameter setting tools 8

4 Installation 9

5 Electrical connection 9
5.1 Sample circuits for connection of TR2439 10
5.2 Connection for temperature sensor 10

6 Operating and display elements 11

7 Menu 12
7.1 Process value display (RUN) and menu structure 12
7.2 Explanation of the menu 13

8 Parameter setting 14
8.1 Parameter setting in general 15
8.1.1 Change between the menus 15
8.1.2 Change to the process value display (RUN mode) 15
8.1.3 Locking / Unlocking 16
8.1.4 Timeout 16
8.1.5 Configure colour change display 16
8.1.6 Setting of the limit values for colour change 16
8.1.7 Read the min/max values 17
8.1.8 Resetting all parameters to factory setting 17

9 Operation 17
9.1 Reading of the set parameters 17
9.2 Error indications / self-diagnostics 18
10 Technical data 18
11 Factory setting 19

1 Safety instructions

UK

- Please read this document prior to set-up of the unit. Ensure that the product is suitable for your application without any restrictions.
- If the operating instructions or the technical data are not adhered to, personal injury and/or damage to property can occur.
- Improper or non-intended use may lead to malfunctions of the unit or to unwanted effects in your application. That is why installation, electrical connection, set-up, operation and maintenance of the unit must only be carried out by qualified personnel authorised by the machine operator.
- Check the compatibility of the product materials (→ Technical data) with the media to be measured in all applications.
- The responsibility whether the measurement devices are suitable for the respective application lies with the operator. The manufacturer assumes no liability for consequences of misuse by the operator. Improper installation and use of the devices result in a loss of the warranty claims.

2 Functions and features

With temperature sensors connected the unit monitors the system temperature in machinery and plant.

Connectable temperature sensors:

- Temperature sensors TM, TS or TT.
- Resistance thermometer RTD (Pt 100 or Pt 1000).

The unit automatically detects the connected sensor type and configures itself accordingly.

The electrical measuring method (3-wire or 4-wire sensor) is determined via the menu setting and used bridge(s) (→ 7.2).

3 Function

- The unit displays the current system temperature.
- It features an IO-Link interface and is designed for full bidirectional communication.
- The unit generates 2 output signals according to the parameter setting:
  - OUT1/IO-Link: Switching signal, limit values for temperature
  - OUT2: Analogue signal for temperature

3.1 Switching function

OUT1 changes its switching status if it is above or below the set switching limits. Hysteresis or window function can be selected.

Hysteresis function

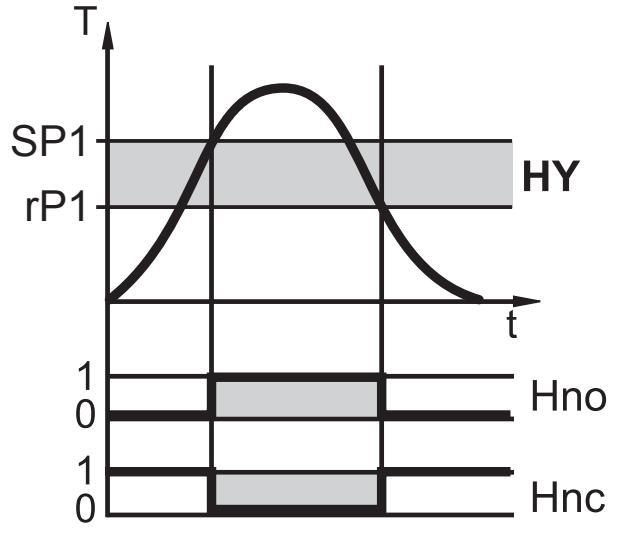

T = Temperature
SP1 = set point
rP1 = reset point
HY = hysteresis
Hno = hysteresis NO (normally open)
Hnc = hysteresis NC (normally closed)

Window function

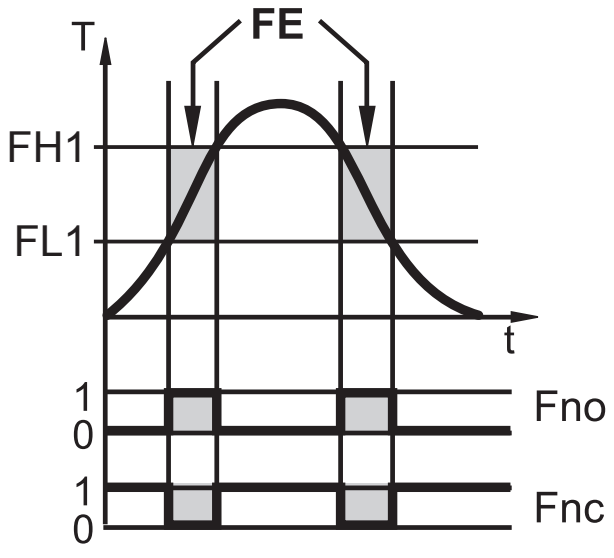

T = Temperature
FH1 = upper limit value
FL1 = lower limit value
FE = window
Fno = window NO (normally open)
Fnc = window NC (normally closed)

When the hysteresis function is set, the set point (SP1) is defined first and then the reset point (rP1) which must be of a lower value. If only the set point is changed, the reset point remains constant.

When set to the window function the upper limit value (FH1) and the lower limit value (FL1) have a fixed hysteresis of 0.25 % of the final value of the measuring range. This keeps the switching state of the output stable if the temperature varies slightly.

3.2 Analogue function

- The unit converts the measured signal into a temperature-proportional analogue signal. Depending on the parameter setting the output signal is at:

  4...20 mA [ou2] = I
  20...4 mA [ou2] = I_{neg}
  0...10 V [ou2] = U
  10...0 V [ou2] = U_{neg}

- The analogue signal can be scaled, that means the limits of the measuring range for the lower output signal (ASP2 = analogue start point) and the upper output signal (AEP2 = analogue end point) can be set.

  Minimum distance between [ASP2] and [AEP2] = 5 K.

3.2.1 Current output

Maximum measuring range at [ou2] = I

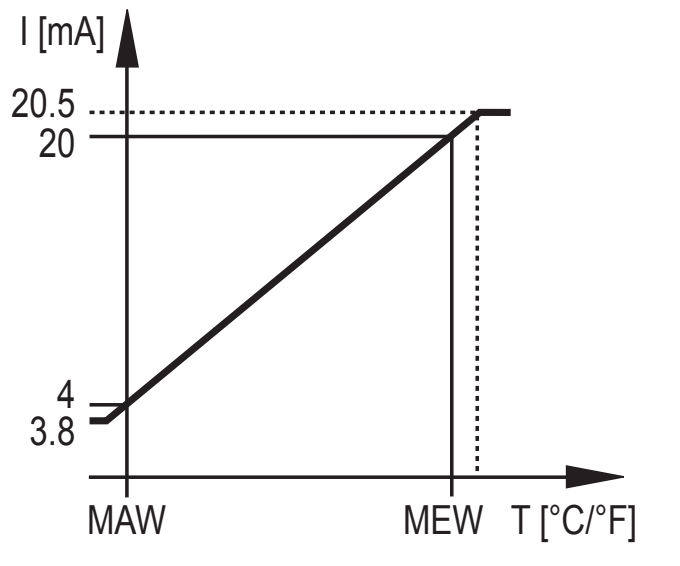

MAW = initial value of the measuring range
MEW = final value of the measuring range

Measuring range scaled at [ou2] = I

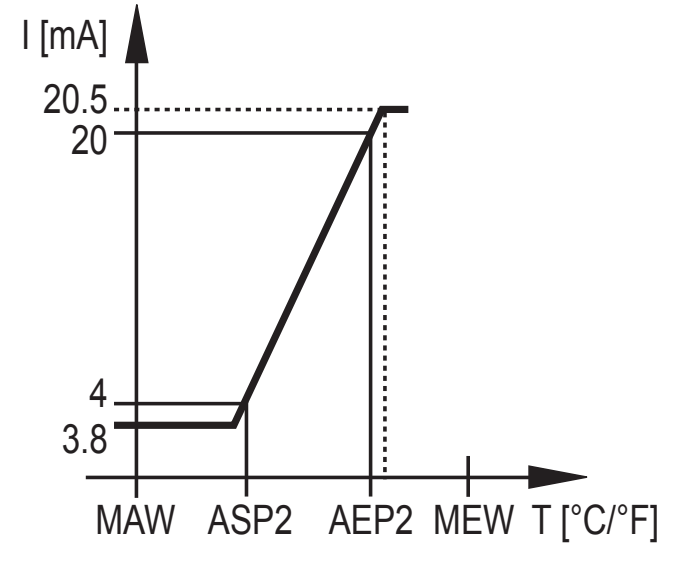

ASP2 = analogue start point
AEP2 = analogue end point

Within the measuring range the output signal is between 4 and 20 mA.
If the temperature value (T) is outside the measuring range, the following output signal is displayed:

	[ou2] = I	[ou2] = Ineg
T < MAW (ASP2)	3.8...4 mA	20.5...20 mA
T > MEW (AEP2)	20...20.5 mA	4...3.8 mA

In case of internal fault, the output signal behaves according to the parameter set in [FOU2]:

	[FOU2] = On	[FOU2] = OFF
[ou2] = I	21 mA	3.5 mA
[ou2] = Ineg	3.5 mA	21 mA

3.2.2 Voltage output

Maximum measuring range at [ou2] = U

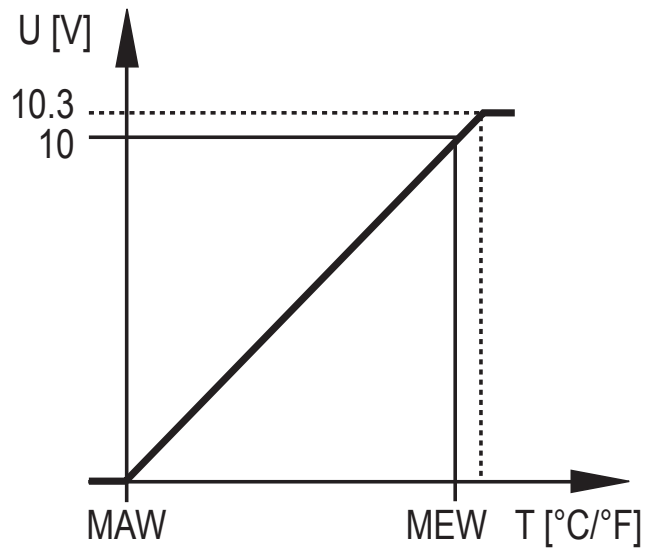

MAW = initial value of the measuring range
MEW = final value of the measuring range

Measuring range scaled at [ou2] = U

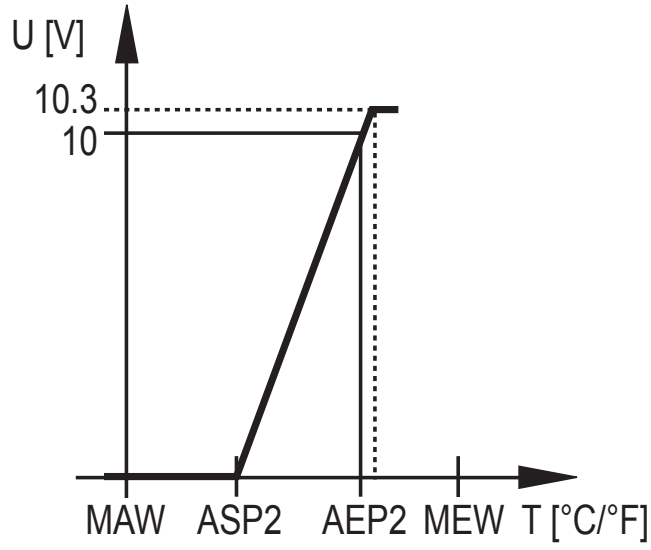

ASP2 = analogue start point
AEP2 = analogue end point

Within the measuring range the output signal is between 0 and 10 V.
If the temperature value (T) is outside the measuring range, the following output signal is displayed:

	[ou2] = U	[ou2] = Uneg
T < MAW (ASP2)	0 V	10.3...10 V
T > MEW (AEP2)	10...10.3 V	0 V

In case of internal fault, the output signal behaves according to the parameter set in [FOU2]:

	[FOU2] = On	[FOU2] = OFF
[ou2] = U	10.6 V	0 V
[ou2] = Uneg	0 V	10.6 V

3.3 Display colour change

The colour of the characters in the display can be set via the parameter [colr].

With the parameters rED (red) and GrEn (green), the display is permanently set to one colour. Via further parameters, the colour of the characters changes according to the measured value:

	OUT1	OUT1 and OUT2	Colour change to...
Parameter	r1ou	r-cF	red
	G1ou	G-cF	green

3.3.1 Parameter r1ou, G1ou

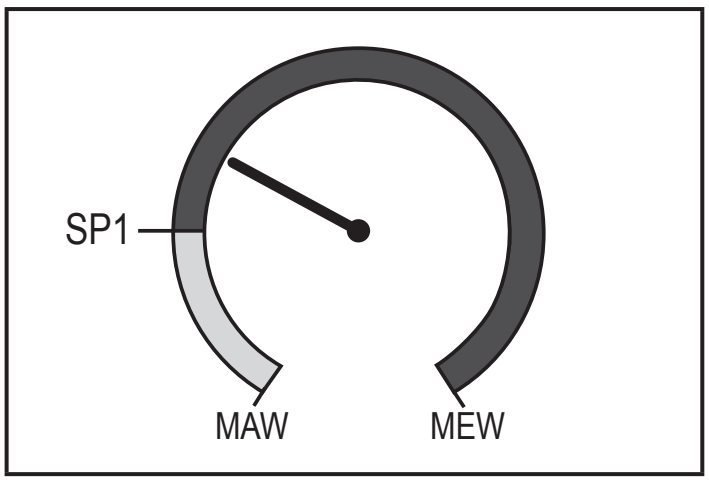

Hysteresis function:

Colour change if measured value is above the switch point

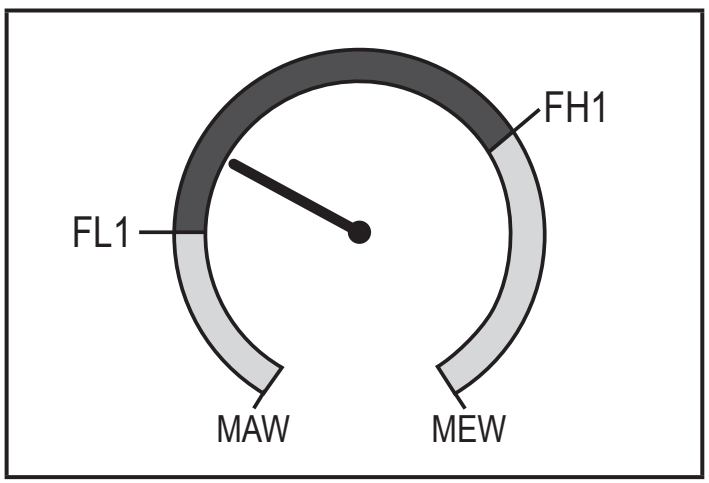

Window function:

Colour change if measured value is within the window range

3.3.2 Parameter r-cF, G-cF

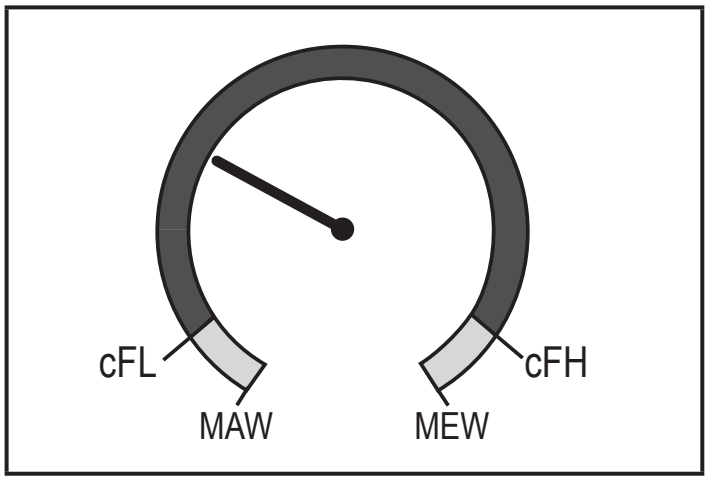

Colour change if the measured value is within definable limits.

MAW = initial value of the measuring range, MEW = final value of the measuring range

3.4 IO-Link

3.4.1 General information

This unit has an IO-Link communication interface which requires an IO-Link-capable module (IO-Link master) for operation.

The IO-Link interface enables direct access to the process and diagnostic data and provides the possibility to set the parameters of the unit during operation.

In addition communication is possible via a point-to-point connection with a USB adapter cable.

You will find more detailed information about IO-Link at www.ifm.com/gb/io-link.

3.4.2 Device-specific information

You will find the IODDs necessary for the configuration of the IO-Link unit and detailed information about process data structure, diagnostic information and parameter addresses at www.ifm.com/gb/io-link.

3.4.3 Parameter setting tools

You will find all necessary information about the required IO-Link hardware and software at www.ifm.com/gb/io-link.

4 Installation

▶ Connect the unit to a temperature sensor and fix it with the help of mounting accessories.

Mounting set for direct connection of temperature sensors TT: E30017.
Further information of mounting accessories at www.ifm.com.

5 Electrical connection

The unit must be connected by a qualified electrician.
The national and international regulations for the installation of electrical equipment must be adhered to.
Voltage supply to EN 50178, SELV, PELV.

UK

▶ Disconnect power.

▶ Connect the unit as follows:

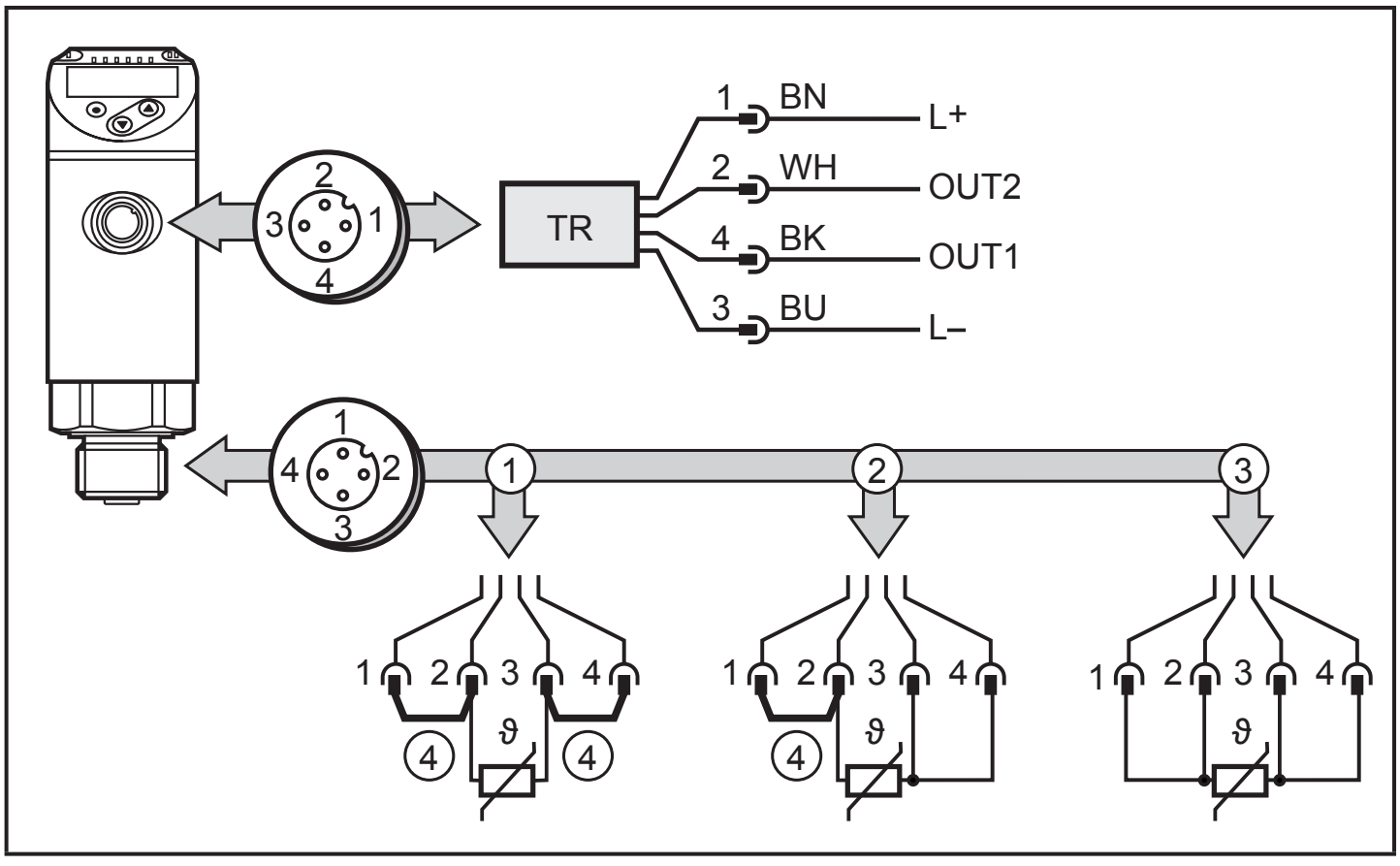

BK: black; BN: brown; BU: blue; WH: white. Colours to DIN EN 60947-5-2

1: two-wire sensor
2: three-wire sensor
3: four-wire sensor
4: bridge

5.1 Sample circuits for connection of TR2439

1 x positive switching / 1 x analogue	1 x negative switching / 1 x analogue
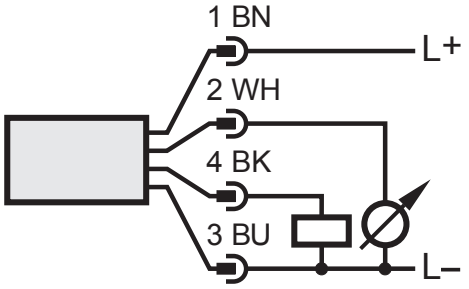	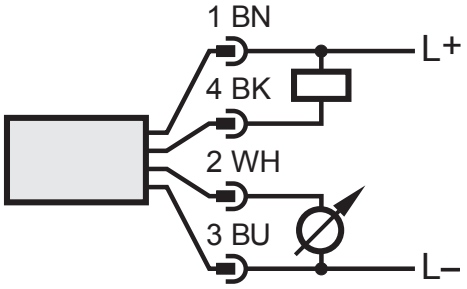

Pin 1	L+
Pin 3	L-
Pin 4 (OUT1)	• Switching signal: limit values for temperature • IO-Link
Pin 2 (OUT2)	• Analogue signal for temperature

5.2 Connection for temperature sensor

2-wire sensor	Menu setting: Mmod = 4w, links between 1 / 2 and 3 / 4. A wiring fault can be corrected in the menu COF.
3-wire sensor	Menu setting: Mmod = 3w, link between 1 / 2. The maximum cable resistance of 10 Ω per core must not be exceeded (this corresponds to a cable length of approx. 80 m for a wire cross-section of 0.14 mm²).
4-wire sensor	Menu setting: Mmod = 4w.

6 Operating and display elements

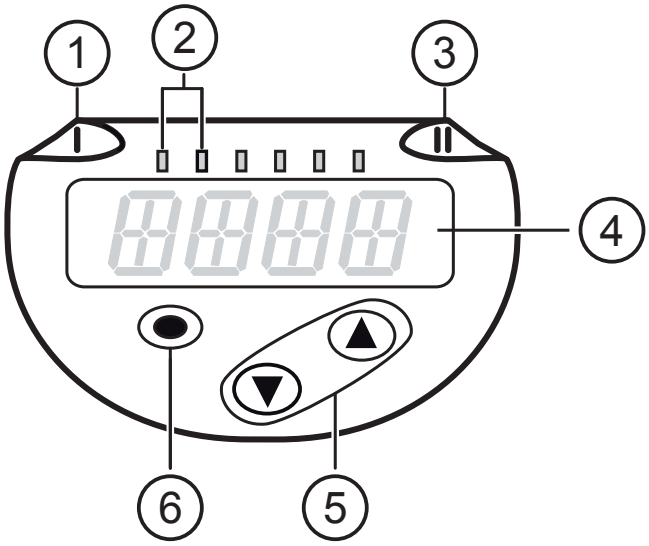

UK

1, 2, 3: Indicator LEDs
• LED 1 = switching status OUT1 (lights if output 1 is switched) • LED 2 = temperature in the indicated unit of measurement • LED 3 = no function
4: Alphanumeric display, 4 digits
• Display of current temperature in red or green colour. • Display of the parameters and parameter values.
5: Buttons up [▲] and down [▼]
• Select parameters • Change parameter values (hold button pressed) • Change of the display unit in the normal operating mode (RUN mode) • Locking / Unlocking (press buttons simultaneously > 10 seconds)
6: Button [●] = Enter
• Change from the RUN mode to the main menu • Change to the setting mode • Acknowledge the set parameter value

7 Menu

7.1 Process value display (RUN) and menu structure

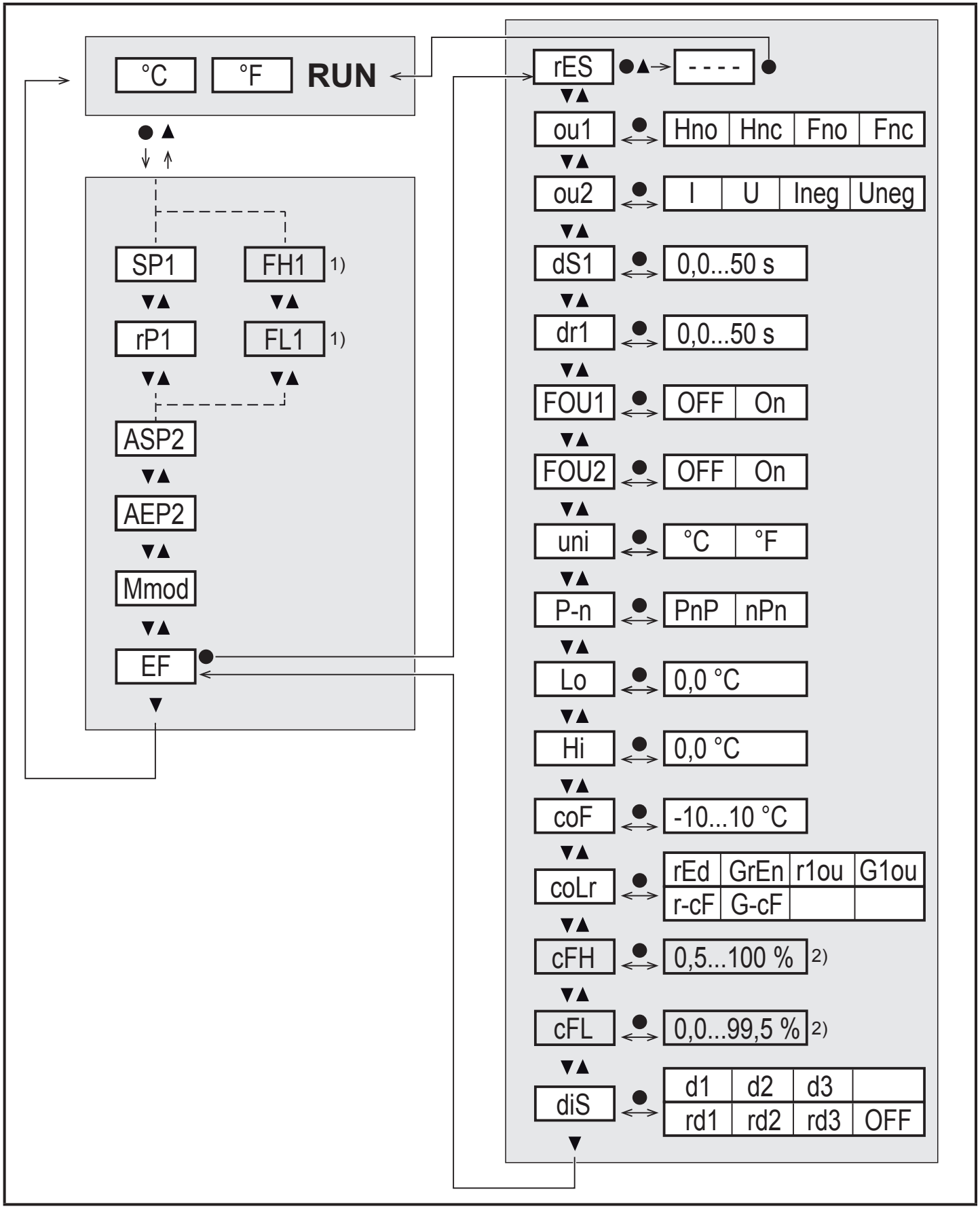

[1] The parameters are only displayed when [ou1] = Fno or Fnc.

[2] The parameters are only displayed when [coLr] = r-cF or G-cF.

7.2 Explanation of the menu

SP1	Set point (upper limit value) with hysteresis function
rP1	Reset point (lower limit value) with hysteresis function
FH1	Set point (upper limit value) with window function
FL1	Set point (lower limit value) with window function
ASP2	Analogue start point
AEP2	Analogue end point
Mmod	Measurement method (2-wire, 3-wire or 4-wire temperature sensors): 3w = 3-wire measurement 4w = 2-wire and 4-wire measurement
EF	Extended functions. Opening of the lower menu level.
rES	Restoring the factory settings
ou1	Output function OUT1 (switching output): Hno = Hysteresis function normally open Hnc = Hysteresis function normally closed Fno = Window function normally open Fnc = Window function normally closed
ou2	Output function OUT2 (analogue output): I = current signal 4...20 mA Ineg = current signal 20...4 mA U = voltage signal 0...10 V Uneg = voltage signal 10...0 V
dS1	Switching delay on OUT1 in seconds
dr1	Switch-off delay on OUT1 in seconds
FOU1	Behavior of output OUT1 in case of an internal fault. On = Output 1 switches on in case of a fault. OFF = Output 1 switches off in case of a fault.
FOU2	Behavior of output OUT2 in case of an internal fault. On = The analog signal goes to the upper limit value. OFF = The analog signal goes to the lower limit value.
uni	Standard unit of measurement for temperature (°C or °F)
P-n	Output logic: pnp / npn
Lo	Minimum value of the temperature measured in the process since the last reset or deletion of memory.
Hi	Maximum value of the temperature measured in the process since the last reset or deletion of memory.

coF	Zero-point calibration. The internal measured value 0 is shifted by this value.
coLr	Colour configuration of the display: rEd = Process value always red. GrEn = Process value always green. r1ou = Process value red in case of switched output OUT1. G1ou = Process value green in case of switched output OUT1. r-cF = Display red if measured value between limit values cFL...cFH, irrespective of the output function. G-cF = Display green if measured value between limit values cFL...cFH, irrespective of the output function.
cFH	Upper limit value for colour change temperature.
cFL	Lower limit value for colour change temperature.
diS	Update rate and orientation of the display: d1 = update of the measured values every 50 ms. d2 = update of the measured values every 200 ms. d3 = update of the measured values every 600 ms. rd1, rd2, rd3 = display as for d1, d2, d3; rotated by 180°. OFF = The measured value display is deactivated in the RUN mode. The LEDs remain active even if the display is deactivated. Error messages are displayed even if the display is deactivated.

8 Parameter setting

Parameters can be set before installation and set-up of the unit or during operation.

If you change parameters during operation, this will influence the function of the plant.

▶ Ensure that there will be no malfunctions in your plant.

During parameter setting the unit remains in the operating mode. It continues to monitor with the existing parameter until the parameter setting has been completed.

The parameters can also be set via the IO-Link interface (→ 3.4).

8.1 Parameter setting in general

1. Change from the RUN mode to the main menu	[●]
2. Select the requested parameter	[▲] or [▼]
3. Change to the setting mode	[●]
4. Modification of the parameter value	[▲] or [▼] > 1 s
5. Acknowledge the set parameter value	[●]
6. Return to the RUN mode	→ 8.1.2

Press [▲] + [▼] simultaneously to leave the setting mode without saving the changed parameter.

If [C.Loc] is displayed when attempting to change a parameter value, a change is made via a parameter setting software at the same time (temporary locking).

If [S.Loc] is displayed, the sensor is permanently locked via software. This locking can only be removed with a parameter setting software.

8.1.1 Change between the menus

1. Change from the RUN mode to the main menu	[●]
2. Select parameter EF	[▼]
3. Change to the submenu EF	[●]
4. Select parameter CFG, MEM, DIS	[▼]
5. Change to the submenu CFG, MEM, DIS	[●]
6. Return to the next upper menu	[▲] + [▼] simultaneously

8.1.2 Change to the process value display (RUN mode)

There are 3 possibilities:

I.	Wait for 30 seconds (→ 8.1.4).
II.	Press [▲] until the RUN mode is reached.
III.	Press [▲] + [▼] simultaneously until the RUN mode is reached.

8.1.3 Locking / Unlocking

The unit can be locked electronically to prevent unintentional settings.
On delivery: not locked.

Locking	▶ Make sure that the unit is in the normal operating mode. ▶ Press [▲] and [▼] simultaneously for 10 s until [Loc] is displayed. During operation: [Loc] is briefly displayed if you try to change parameter values.
Unlocking	▶ Make sure that the unit is in the normal operating mode. ▶ Press [▲] and [▼] simultaneously for 10 s until [uLoc] is displayed.

8.1.4 Timeout

If no button is pressed for 30 s during parameter setting, the unit returns to the operating mode with unchanged values.

8.1.5 Configure colour change display

▶ Select [coLr] and define the colour of the process value display: rEd, GrEn, r1ou, G1ou, r-cF, G-cF (→ 3.3).	[coLr]

8.1.6 Setting of the limit values for colour change

▶ Select [cFH] and set the upper limit value. ▶ Select [cFL] and set the lower limit value. [cFH] and [cFL] are only displayed if [coLr] = r-cF or G-cF. [cFH] und [cFL] are irrespective of the default set points. The setting range corresponds to the measuring range and its minimum limit is [cFL] and its maximum limit is [cFH].	[cFH] [cFL]

8.1.7 Read the min/max values

▶ Select [Hi] or [Lo] and read the value. [Hi] = max. value, [Lo] = min. value. Delete memory: ▶ Select [Hi.T] or [Lo.T]. ▶ Briefly press [●]. ▶ Keep [▲] or [▼] pressed. > [----] is displayed. ▶ Briefly press [●]. It makes sense to delete the memories as soon as the unit operates under normal operating conditions for the first time.	[Hi] [Lo]

8.1.8 Resetting all parameters to factory setting

▶ Select [rES]. ▶ Press [●]. ▶ Press [▲] or [▼] and keep pressed until [----] is displayed. ▶ Briefly press [●]. It is recommended to take down your own settings in the table before carrying out the function → 11 Factory setting.	[rES]

9 Operation

After power on, the unit is in the RUN mode (= normal operating mode). It carries out its measurement and evaluation functions and provides output signals according to the set parameters.

9.1 Reading of the set parameters

▶ Briefly press [●].

▶ Click [▼] to select the parameter.

▶ Briefly press [●].

> The unit displays the corresponding parameter value for about 30 s. After that the unit returns to the RUN mode.

9.2 Error indications / self-diagnostics

Diplay	Warning message
[SC1]	Excessive current at OUT1. LED1 for OUT1 flashing.
[OL]	Detection zone exceeded.
[UL]	Below the detection zone.
[C.Loc]	Setting pushbuttons locked, parameter change rejected. Active IO-Link communication.
[S.Loc]	Setting pushbuttons locked, parameter change rejected. Unlock using parameter setting software.
[Err]	• No temperature sensor connected. • Fault or short circuit in the temperature sensor, wire break. • Detection zone is exceeded (T < -140°C or T > +640°C).

Analogue signal in case of an error → 3.2.

10 Technical data

Technical data and scale drawing at www.ifm.com.

11 Factory setting

	Factory setting	User setting
SP1	60 °C	
rP1	50 °C	
ASP2	-40 °C	
AEP2	300 °C	
Mmod	4w	
ou1	Hno	
ou2	I	
dS1	0	
dr1	0	
FOU1	OFF	
FOU2	OFF	
uni	°C	
P-n	PnP	
coF	0	
coLr	rEd	
diS	d2	