efector400

E60076

MEASURING WHEEL U:500 N:10

Accessories

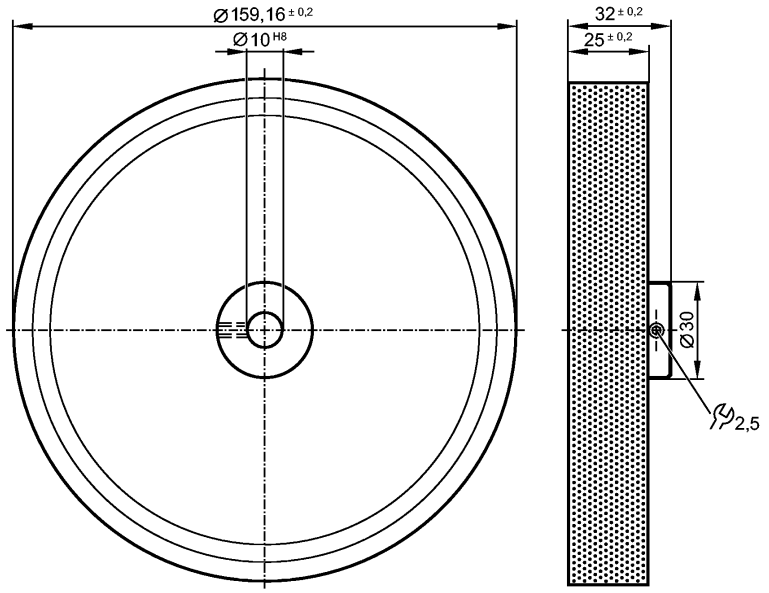

Made in Germany

Product characteristics		
Measuring wheel		
Ø 159.16 mm / Ø 10 mm		
Environment		
Ambient temperature	[°C]	-30...80
Mechanical data		
Design		rubber
Surface hardness		55° ±5° Shore A
Housing materials		wheel: aluminium; tread: PU (polyurethane)
Tightening torque	[Nm]	3 (Screw)
Weight	[kg]	0.269
Remarks		
Pack quantity	[piece]	1
Other data		
Circumference [mm]		500
D Shaft diameter [mm]		10
B Width [mm]		25 ±0.2
A Total width [mm]		32 ±0.2