Connector/cable

BCC M444-0000-2A-000-41X475-000
Order code: BCC06ZC

BALLUFF
sensors worldwide

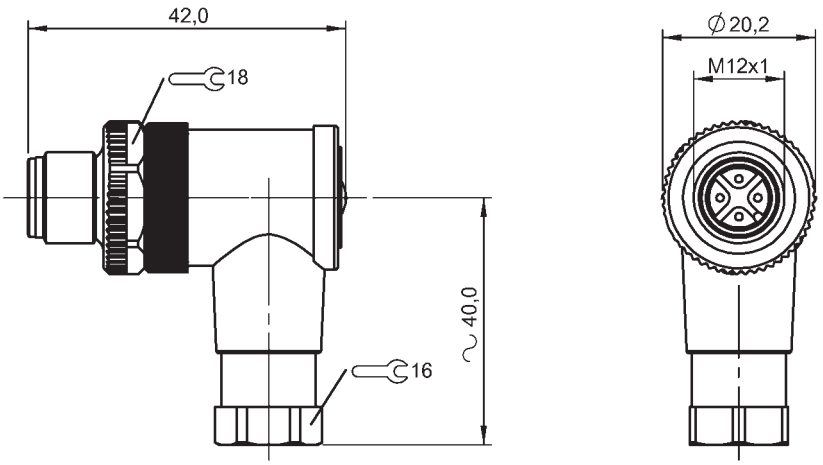

- **Male M12**
- **90°angle**

General attributes	
Enclosure Type per IEC 60529	IP67
Power indicator	No
Electrical attributes	
Connection type	Screw connection
Operating voltage UB max. AC [V]	250.0 V
Operating voltage UB max. DC [V]	250.0 V
Rated current (40°C)	4.0 A
Mechanical attributes	
Ambient temperature Ta max.	85 °C
Ambient temperature Ta min.	-25 °C
Cable diameter max.	6.00 mm
Cable diameter min.	4.00 mm
Connector configuration	90°angle

Connector type	M12x1
Connector type (Header I)	Male M12
Contact material	CuZn
Cover nut material	GD-Zn
Grip material	PA
Mounting type of wire	Screw terminals
Number of female/male pins	4
System	user assembly
Tightening torque pigtail	0.6 Nm
Wire cross-section max.	0.75 mm²
Wire cross-section min.	0.14 mm²

Additional text
Enclosure type accord. to IEC 60529, when threaded together with theappropriate counterpart.

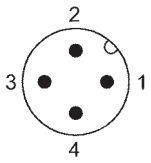

PIN 1-4 usable