PyroMini 2.2

Miniature Infrared Temperature Sensor for Demanding Applications with Optional Touch Screen



Model shown includes optional touch screen interface

- Short-wavelength measurement for low-emissivity targets such as steel rollers and many other metal surfaces
- Miniature sensing head and configurable electronics module
- Touch screen (optional) for temperature indication and configuration. Screen turns bright red in alarm condition for maximum visibility
- Temperature ranges from 100°C to 2000°C
- Adjustable emissivity setting on all models
- Data logging to MicroSD Card (optional) on touch screen models
- 4 to 20 mA or RS485 Modbus outputs
- Alarm relay outputs rated 24 V DC (optional) - no need for separate trip amplifier
- Resistant to interference from movement of sensing head cable - ideal for mounting on robot arms
- Maximum, minimum, average and instantaneous readings, peak or valley hold, reflected energy compensation
- Optional mounting brackets, air purge collar and laser sighting tool
- Sensing head sealed to IP65

GENERAL SPECIFICATIONS

Temperature Range
PT models: 100°C to 400°C
MT models: 250°C to 1000°C
HT models: 450°C to 2000°C
Maximum Temperature Span (-CRT models)
Full temperature range (up to 1550°C)
Minimum Temperature Span (-CRT models)
100°C
Output
4 to 20 mA or RS485 Modbus (up to 247 sensors may be installed on a single Modbus network)
Field of View
See table of Model Numbers
Accuracy
± 2°C or 1% of reading, whichever is greater
Repeatability
± 0.5°C or 0.5% of reading, whichever is greater
Emissivity Setting Range
0.10 to 1.00
Emissivity Setting Method
-CB models: via two rotary switches in electronics box
-BB and -BRT models: via RS485
-CRT and -BRT models: via touch screen
Response Time, t_{90}
≥240 ms (90% response)
Spectral Range
2.0 to 2.6 µm
Supply Voltage
24 V DC ± 5%
Maximum Current Draw
100 mA
Maximum Loop Impedance
-CB and -CRT models: 900 Ω (4 to 20 mA output)
Alarm Relays (-CRT and -BRT models)
2 x Single Pole Changeover alarm relays rated 24 V DC, 1 A, isolated 500 V DC

MECHANICAL

	Sensing head	Electronics Module
Construction	Stainless Steel 316	Cast aluminium
Dimensions	Ø 18 x 45 mm (see diagram)	98(w) x 64(h) x 36(d) mm
Mounting	M16 x 1 mm thread	Two M4 screw holes for wall mounting (see diagram)

Cable Length (sensing head to electronics module)	1 m (standard), up to 30 m (optional)
Weight with 1 m Cable	390 g (approx)
Cable Connections	Removable screw terminal blocks (see Connections) Conductor size: 28 AWG to 18 AWG
Output Cable Gland	Suitable for cable diameters 3.0 to 6.5 mm

ENVIRONMENTAL

	Sensing head	Electronics Module (without touch screen)	Electronics Module (with touch screen)
Environmental Rating	IP65 (NEMA 4)	IP65 (NEMA 4)	
Ambient Temperature Range	0°C to 70°C	0°C to 60°C	0°C to 60°C
Relative Humidity	Maximum 95% non-condensing	Maximum 95% non-condensing	Maximum 95% non-condensing
CE Marked	Yes	Yes	Yes
RoHS Compliant	Yes	Yes	Yes

ELECTROMAGNETIC COMPATIBILITY STANDARDS:

Class	Standard	Description
EMC Directive	EN61326-1:2006	Electrical equipment for measurement, control and laboratory use – Industrial
-Immunity	IEC 61000-4-2	Electrostatic Discharge Immunity
	IEC 61000-4-3	Electromagnetic Field Immunity
	IEC 61000-4-4	Burst Immunity
	IEC 61000-4-5	Surge Immunity
-Emissions	IEC 61000-4-6	Conducted RF Immunity
	EN 55022A	RF Emissions Class A
	EN 55022B	RF Emissions Class B

CALEX ELECTRONICS LIMITED

TOUCH SCREEN (-CRT AND -BRT MODELS)

The optional backlit touch screen interface mounted in the lid of the electronics module provides a large, bright display of the measured temperature, as well as controls allowing full configuration of the sensor. The graph view shows the history of the measured temperature.

In alarm conditions, the display changes colour to provide an immediate and obvious alarm indication. Alarm modes and levels can be configured via the touch screen.

TOUCH SCREEN SPECIFICATIONS

Touch Screen Display Format	2.83" (72 mm) resistive touch TFT, 320 x 240 pixels, backlit
Configurable Parameters	Temperature range, temperature units, emissivity setting, reflected energy compensation, alarms, signal processing, Modbus address (-BRT models), date and time, data logging
Temperature Units	°C or °F configurable
Temperature Resolution	0.1°
Alarm Configuration	Two alarms with adjustable level, individually configurable as HI or LO. Alarm 2 can be set to target temperature or sensing head internal temperature
Signal Processing	Average, peak hold, valley hold, minimum, maximum

EXAMPLE SCREENSHOTS



Screen shown with red background to indicate alarm condition

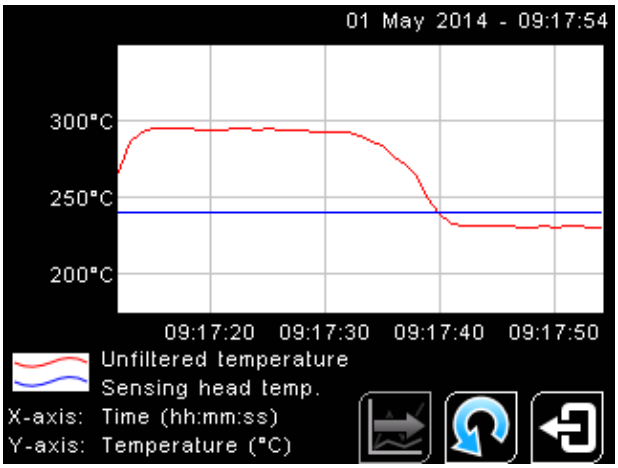

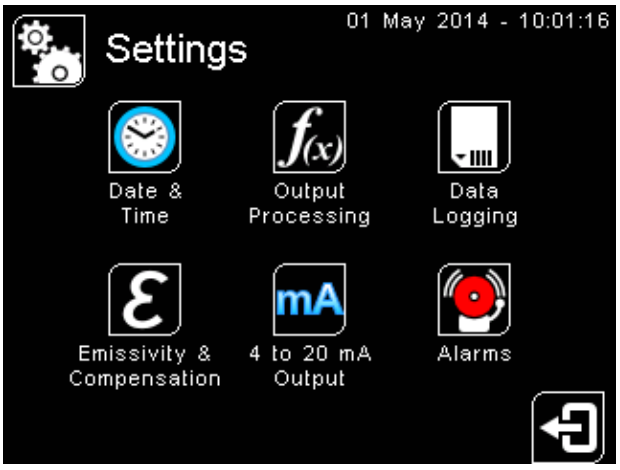

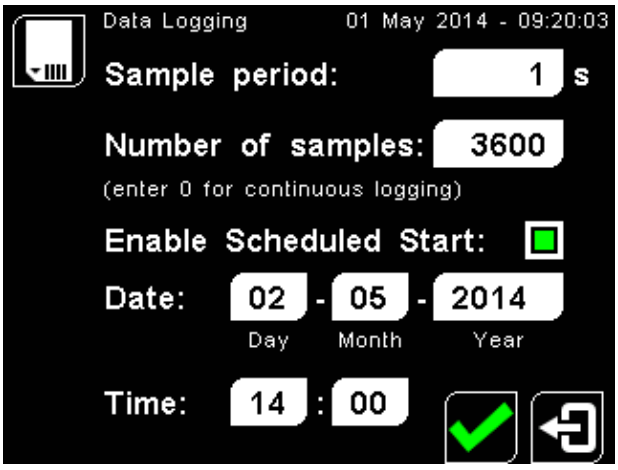

DATA LOGGING SPECIFICATIONS

Data Logging Interval	1 to 86,400 seconds (1 day)
MicroSD Card	Max. capacity: 2 GB (not included)
Internal Clock Battery	1 x BR 1225 3V (not included)
Variables Logged	Target temperature, sensing head temperature, electronics module temperature, max, min, average, emissivity setting, reflected energy compensation temperature, alarm events
File format	.csv
Configurable Parameters	Sample period, number of samples, scheduled start date and time

DATA LOGGING (-CRT AND -BRT MODELS)

The PyroMini can be used as a standalone data logger.

PyroMini models -CRT and -BRT include a MicroSD card slot for data logging, which can be configured via the touch screen interface. The user can select the sample rate and the number of samples to be taken and schedule the data logging to start at a certain time.

With a 2 GB card, the user can store 28.4 million readings, which provides almost 1 year's worth of data at the fastest possible sample rate of 1 per second.

Data is stored on the MicroSD card in .csv format and can be viewed and edited easily using spreadsheet software. Alarm events can also be logged to the MicroSD Card.

A MicroSD card with SD card adapter is available as an optional accessory.

The MicroSD card slot and battery holder are located on the touch screen circuit board in the lid of the PyroMini. Readings are time and date stamped using the sensor's internal clock. The clock is reset when the power is disconnected, or it will continue if the optional battery is fitted.

MODEL NUMBERS

Series	Field of View	Measurement Temperature Range	Output and Interface
PM2.2	151	PT	CB CRT BB BRT
	251 751 CF	MT HT	

SERIES **PM2.2**

PyroMini 2.2 series infrared temperature sensor with miniature sensing head and separate electronics module



Model shown does not include screen

OUTPUT AND INTERFACE

-CB 4 to 20 mA output, no screen

-CRT 4 to 20 mA output and two alarm relay outputs, with touch screen

-BB RS485 Modbus output, no screen

-BRT RS485 Modbus output and two alarm relay outputs, with touch screen

FIELD OF VIEW

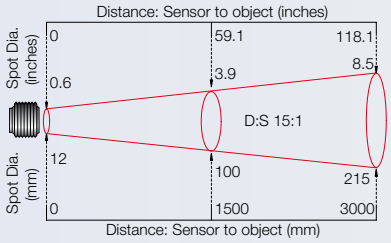

PU151-2.2

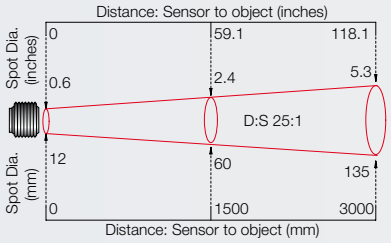

PU251 - 2.2

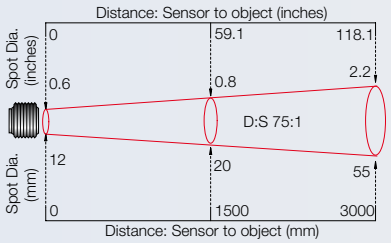

PU751-2.2

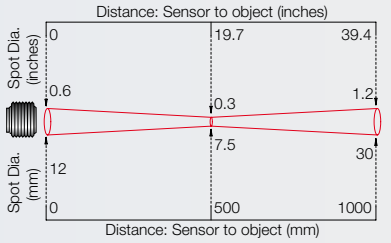

PUCF-2.2

Diameter of target spot measured versus distance from sensing head - 90% energy

MEASUREMENT TEMPERATURE RANGE (°C)

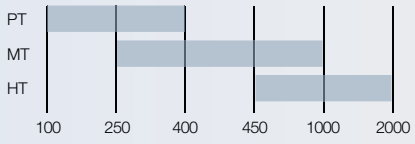

-CB models: Fixed 4 to 20 mA output scale (e.g. -MT: 250°C @ 4 mA, 1000°C @ 20 mA)

-CRT models: 4 to 20 mA output is configurable within this range

-BB and -BRT models: Digital output, full temperature range

EXAMPLE: PM2.2-251-MT-BRT

Series	Field of View	Measurement Temperature Range	Output and Interface
PM2.2 PyroMini 2.2	**251** 25:1 divergent optics	**MT** 250°C to 1000°C	**BRT** RS485 Modbus output and two alarm relay outputs, with touch screen

CONNECTIONS

-CB and -CRT models

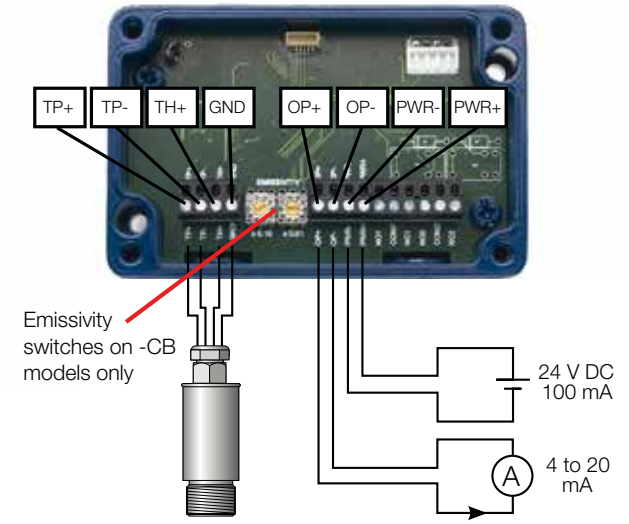

-BB and -BRT models

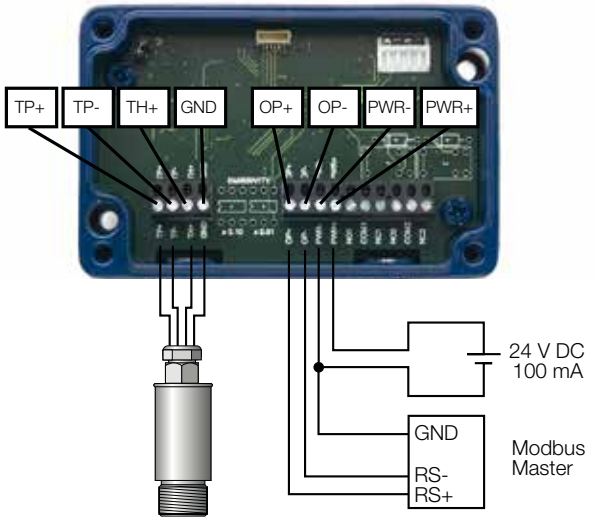

DIMENSIONS AND ACCESSORIES

Electronics Module

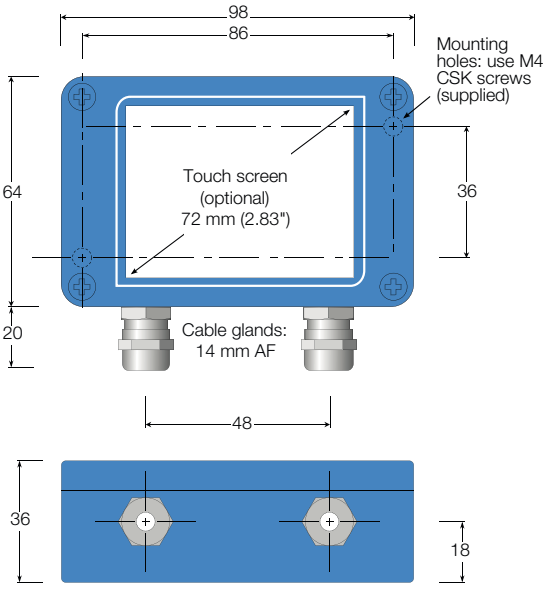

Sensing Head

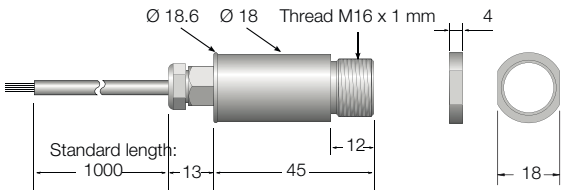

Mounting Nut (included)

Air Purge Collar

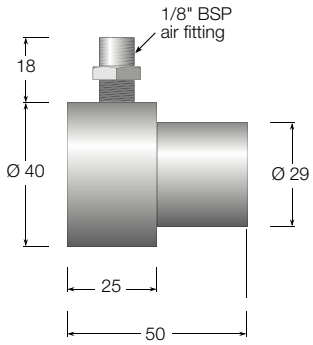

All dimensions in mm

ACCESSORIES ALSO AVAILABLE

MSD	MicroSD Card with SD Card adapter: stores logged data (-CRT and -BRT models)
PM2.2CE	Extended cable between sensing head and electronics module (up to 30 m length)
CALCERTA	Calibration certificate
LSTS	Laser sighting tool
ABS	Adjustable mounting bracket
FBS	Fixed mounting bracket
DLSB	Dual Laser Sighting Bracket
APSN	Air purge collar
PM180	6-channel Modbus temperature indicator with touch screen interface and data logging


Laser Sighting Tool


Air Purge Collar


Adjustable mounting bracket


Dual Laser Sighting Bracket

Calex Electronics Limited
PO Box 2, Leighton Buzzard, Bedfordshire, England LU7 4AZ
Tel: +44 (0)1525 373178/853800 Fax: +44 (0)1525 851319 Lo-call Tel: 0845 3108053
E-mail: mail@calex.co.uk Online: http://www.calex.co.uk

Issue B - Nov 14
Specifications subject to change without notice