PLAIN BRASS GARDEN TAP BSP

Plain brass garden tap with butterfly handle.
With hose coupler.
NBR packing and gasket.



Size :	DN1/2" to DN1"
Connection :	Male BSP, hose coupling
Min Temperature :	+0°C
Max Temperature :	+60°C
Max Pressure :	16 Bars
Specifications :	With hose coupling Muli turns type Brass butterfly handle NBR packing
Materials :	Brass CW617N according to EN 12165

Sferaco 90 rue du Ruisseau 38297 St Quentin Fallavier Tel: + 33 (0) 474.94.15.90 Fax: + 33 (0) 474.95.62.08 Internet: www.sferaco.fr E-mail : info@sferaco.fr

Information provided as an indication and subject to possible modification

PLAIN BRASS GARDEN TAP BSP

SPECIFICATIONS :

- With hose coupling
- Plain brass garden tap
- NBR packing
- Butterfly brass handle
- Body marking : SF/B

USE :

- Water distribution
- Min Temperature Ts : + 0°C
- Max Temperature Ts :+ 60°C
- Max Pressure Ps : 10 Bars

RANGE :

- Male BSP cylindrical with hose coupling and butterfly brass handle **Ref. 1345** from DN 1/2" to 1"
- Handling device DN 1/2" (for garden tap DN 1/2"-3/4" and DN 3/4"-3/4") **Ref. 9800037**
- Handling device DN 3/4" (for garden tap DN 3/4"-1") **Ref. 9800038**

Information provided as an indication and subject to possible modification

PLAIN BRASS GARDEN TAP BSP

MATERIALS :

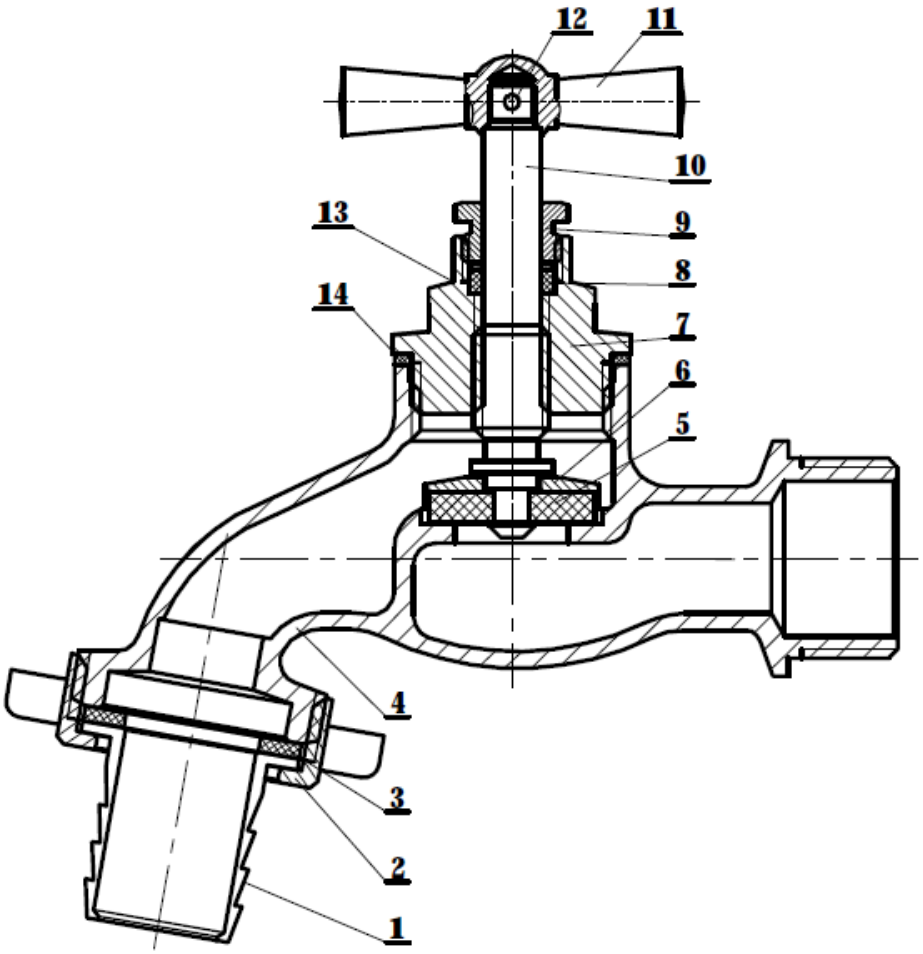

Item	Designation	Materials
1	Hose coupling	Brass
2	Nut	
3	Gasket	NBR
4	Body	Brass CW617N according to EN12165
5	Gasket	NBR
6	Ring	Brass
7	Bonnet	
8	Ring	
9	Gland	
10	Stem	Brass CW617N according to EN12165
11	Handle	Brass
12	Pin	
13	Gasket	NBR
14	Gasket	Cardboard

Information provided as an indication and subject to possible modification

PLAIN BRASS GARDEN TAP BSP

SIZE (in mm) :

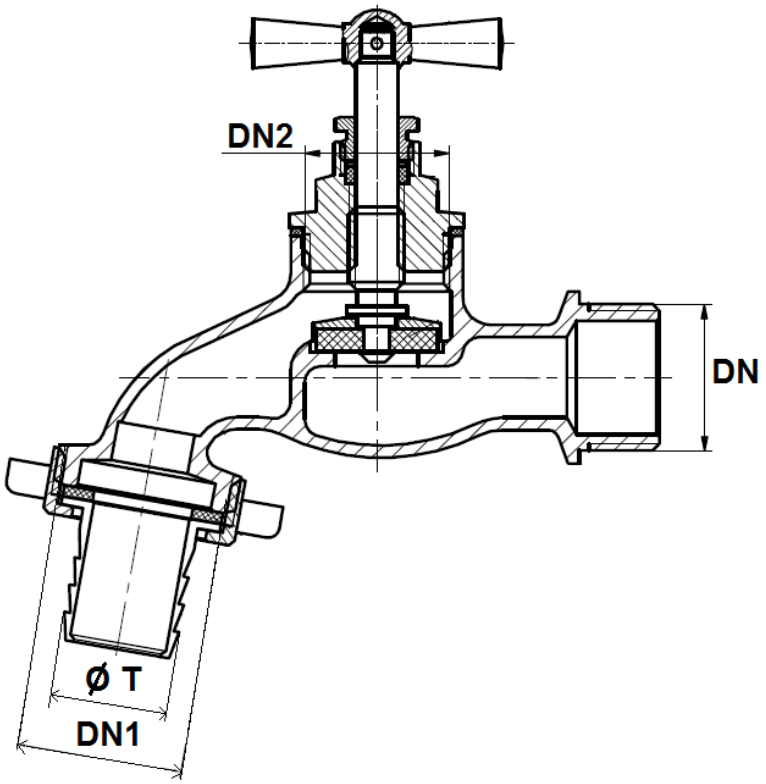

DN	1/2"	3/4"	3/4"
DN1	3/4"	3/4"	1"
DN2	1/2"	1/2"	3/4"
Ø T	17	17	21
Weight (Kg)	0.23	0.24	0.35
Ref.	1345045	1345055	1345056

STANDARDS :

- Manufacturer certified ISO 9001 : 2015
- DIRECTIVE 2014/68/EU : Products excluded from directive (Article 1, § 2b)
- Male BSP cylindrical threaded end according to ISO 228-1

ADVICE : Our opinion and our advice are not guaranteed and SFERACO shall not be liable for the consequences of damages.
The customer must check the right choice of the products with the real service conditions.

Sferaco 90 rue du Ruisseau 38297 St Quentin Fallavier Tel: + 33 (0) 474.94.15.90 Fax: + 33 (0) 474.95.62.08 Internet: www.sferaco.fr E-mail : info@sferaco.fr

Information provided as an indication and subject to possible modification