# 3/2–way Miniature Solenoid Valve



- Direct–acting
- 0 – 145 PSI[1)]
- DN 1.2 – DN 1.6 mm
- NPT 1/8, NPT 1/4, sub–base, and banjo–bolt connection
- Approvals:

Type 6012 can be combined with…

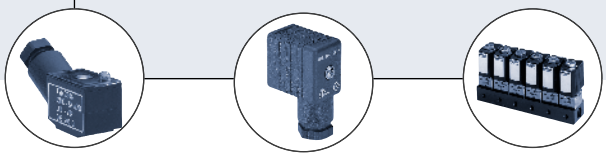

**Type 2506**
Cable plug to DIN EN 175301–803* form C

**Type 2507**
Cable plug industrial standard form B

**Type 6012**
Multiple manifold (e.g. 6–fold)

This direct–acting 3/2–way miniature solenoid valve is available in two versions. Type 6012 is used for blocking, dosing, filling and ventilating neutral gases and liquids, in particular for the control of single–acting pneumatic actuators or for technical vacuum. The modular valve may be mounted singly or in block assembly on a multiple manifold.

Circuit function C

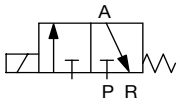


3/2–way valve, P normally closed, port A pressureless

Circuit function D

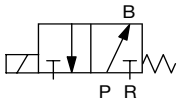


3/2–way valve, P normally open, port B pressurized

Type 6012P was developed as a special pilot valve for direct attachment to externally piloted pneumatic actuators. It consists of the solenoid actuator of Type 6012 and a special connection housing with banjo bolts for simple connection to the pilot air port of the actuator. The valve is equipped with manual override as standard.

Circuit function C

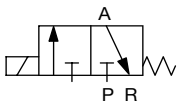


3/2–way valve, P normally closed, port A pressureless

**Burkert Contromatic USA**
2602 McGaw Avenue
Irvine, CA 92614
Tel. 949.223.3100
Fax 949.223.3198
www.burkert-usa.com

| Technical data | |
|---|---|
| **Body material**<br>Type 6012<br>Type 6012P | <br>brass, polyamide (PA), stainless steel 1.4305 (on request)<br>polyamide (PA) |
| **Banjo bolt (Type 6012P)** | nickel–plated brass |
| **Sealing material**<br>Type 6012 / 6012P | <br>FKM / NBR |
| **Media** | neutral gases and fluids (e.g. compressed air, water, hydraulic oil, technical vacuum) |
| **Medium temperature** | 14°F to 212°F (-10°C to 100°C) |
| **Ambient temperature** | max. 131°F (55°C) |
| **Viscosity** | max. 21 cSt |
| **Port connection**<br>Type 6012<br>Type 6012P | <br>NPT 1/8, sub–base<br>NPT 1/8, NPT 1/4, and tube fitting 6 mm |
| **Operating voltage** | 24 V DC, 24 V/60 Hz, 120/240 V / 60 Hz |
| **Voltage tolerance** | ± 10% |
| **Duty cycle/single valve for block assembly on mutiple manifold** | 100 % continuous rating<br>Intermittent operation 60 % (30 min. period or less)<br>or with 2 W coil (on request) |
| **Electrical connection** | ▪ to DIN EN 175301–803* Form C for cable plug Type 2506 (see Ordering chart for Accessories)<br>▪ to DIN 43650 Form B (industrial standard) for cable plug Type 2507 (see Ordering chart for Accessories)<br>▪ Flying leads connection on request |
| **Manual override** | optional (Type 6012)<br>standard (Type 6012P) |
| **Installation** | as required, preferably with actuator upright |
| **Mass**<br>Type 6012 / 6012P | <br>125 g (NPT 1/8) / 135g (Banjo) |
| **Protection class** | IP 65 with cable plug |

[1)] Pressure data [PSI]: Overpressure with respect to atmospheric pressure
* Was DIN 43650

DTS 1000085707 EN Version: - Status: RL (released | freigegeben | validé) printed: 20.01.2015



bürkert
Fluid Control Systems

## Response times

- Response times [ms]: measured at valve outlet at 87 PSI[1)] and 68°F acc. ISO 12238. Opening: pressure build–up 0 – 90 %, closing: pressure relief 100 – 10 %

### Type 6012

| Orifice water [mm] | Cv value [GPM] | Pressure range [PSI] [1)] | Coil power | Power consumption Pick–up | Power consumption Operation | Response times Opening [ms] | Response times Closing [ms] |
|---|---|---|---|---|---|---|---|
| 1.2 | 0.053 | 0 – 145 | 4 W AC or | 9 VA | 6 VA (4 W) | 7 – 10 | 9 – 12 |
| 1.6 | 0.07 | 0 – 87 | 4 W DC | 4 W | 4 W | 7 – 12 | 7 – 12 |

[1)] Pressure data [PSI]: Overpressure with respect to atmospheric pressure

- $C_V$ value [m³/h]: Flow rate value for water, measured at 68°F and 14.5 PSI[1)] pressure differential over a fully opened valve.

### Type 6012P

| Orifice [mm] | $Q_{Nn}$ value air [SCFM] | Pressure range [PSI] [1)] | Coil power | Power consumption Inrush | Power consumption Operation | Response times Opening [ms] | Response times Closing [ms] |
|---|---|---|---|---|---|---|---|
| 1.2 | 1.7 | 0 – 145 | 4 W AC or | 9 VA | 6 VA (4 W) | 7 – 10 | 9 – 12 |
| | | | 4 W DC | 4 W | 4 W | 7 – 12 | 7 – 12 |

[1)] Pressure data [PSI]: Overpressure with respect to atmospheric pressure

- $Q_{Nn}$ value [l/min]: Flow rate value for water, measured at 68°F and 87 PSI[1)] pressure at valve inlet and 14.5 PSI pressure difference

## Material

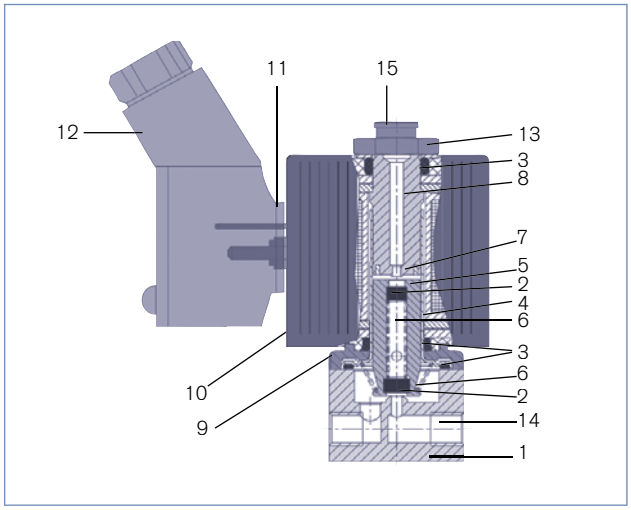


| | | |
|---|---|---|
| 1 | Body | Brass, stainless steel 1.4305<br>PA (polyamide) |
| 2 | Armature seal | FKM / NBR |
| 3 | O–ring | FKM |
| 4 | Guide tube | Stainless steel 1.4303 |
| 5 | Core | Stainless steel 1.4105 |
| 6 | Spring | Stainless steel 1.4310 |
| 7 | Shading ring | Copper, Silver (stainless steel versoin) |
| 8 | Stopper | Stainless steel 1.4105 |
| 9 | Sub–base | Zn3 gl cC surface (brass version)<br>nickel–plated surface (stainless steel version) |
| 10 | Coil | |
| | DIN EN 175301–803* fform C | PA |
| | form B (industrial standard) | Epoxy |
| 11 | Flat seal | NBR |
| 12 | Cable plug | PA |
| 13 | Locknut | 9SMnPb28K (surface Zn5glcA) |
| 14 | Pressure inlet P with | circuit function C |
| 15 | Pressure inlet P with | circuit function D |

## Dimensions [mm] – Manifold for Type 6012

### Single manifold

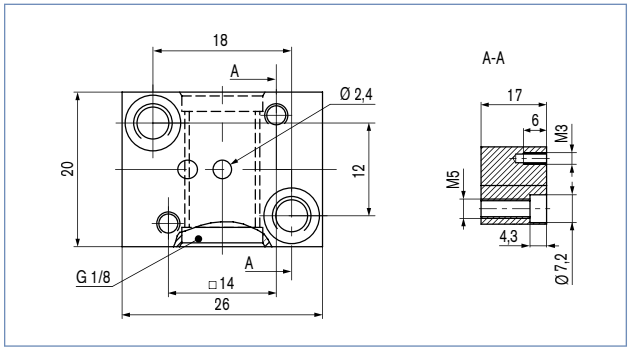


DTS 1000085707 EN Version: - Status: RL (released | freigegeben | validé) printed: 20.01.2015

## Dimensions [mm] – Manifold for Type 6012

### Multiple manifold

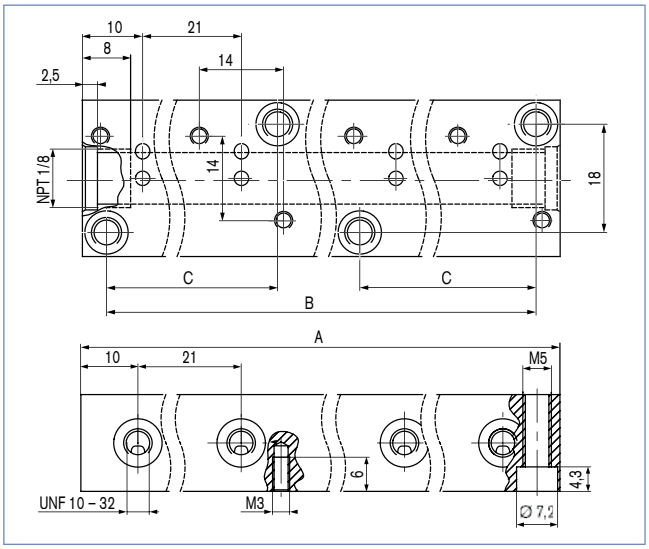


| No. of valves | A [mm] | B [mm] | C [mm] |
|---|---|---|---|
| 1 | 20 | 12 | - |
| 2 | 41 | 33 | - |
| 3 | 62 | 54 | - |
| 4 | 83 | 75 | - |
| 5 | 104 | 96 | - |
| 6 | 125 | 117 | - |
| 7 | 146 | 138 | - |
| 8 | 167 | 159 | 54 |
| 9 | 188 | 180 | 54 |
| 10 | 209 | 201 | 75 |
| 11 | 230 | 222 | 75 |
| 12 | 251 | 243 | 96 |

## Dimensions [mm] – Type 6012

### Coil connection acc. DIN EN 175301–803* form C

(cable plug type 2506)

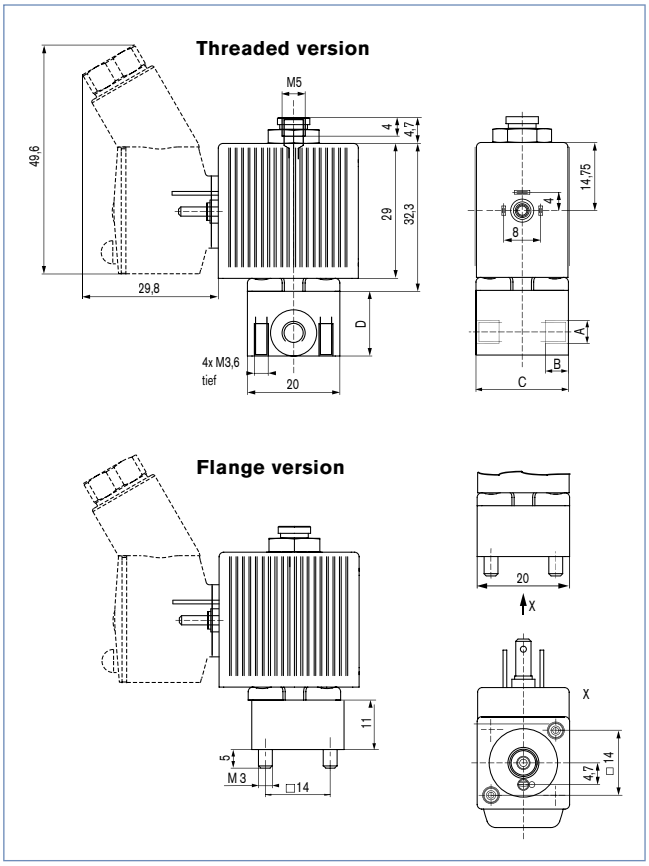


### Coil connection Form B industrial standard

(cable plug type 2507)

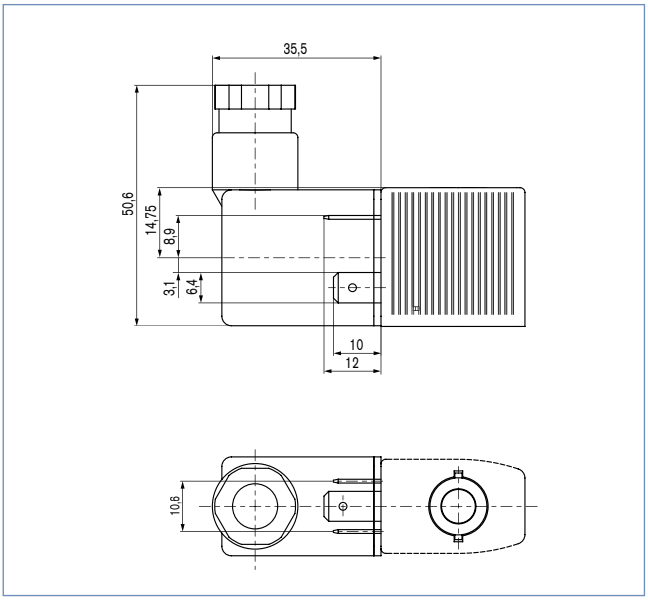


| Port connection | A | B | C | D |
|---|---|---|---|---|
| sleeve | NPT 1/8 | 8 | 25 | 19.5 |
| sub–base | – | – | 20 | 11 |

* Was DIN 43650

DTS 1000085707 EN Version: - Status: RL (released | freigegeben | validé) printed: 20.01.2015

## Dimensions [mm] – Type 6012P

### Version with coil connection acc. DIN EN 175301–803* Form C (cable plug Type 2506)

**With threaded port connection for compressed air, Type 6012**

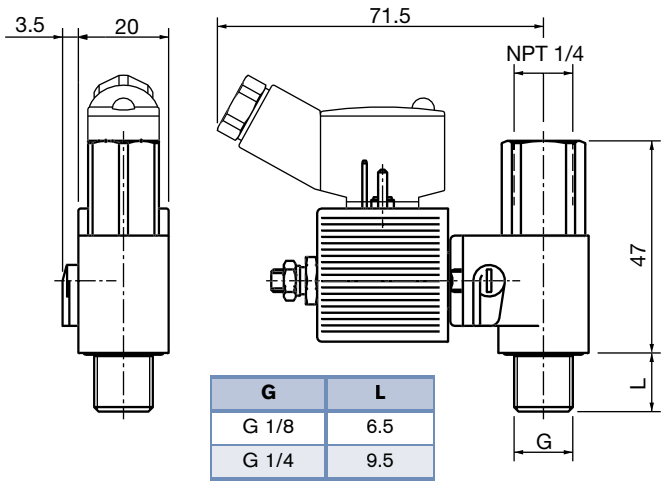


| G | L |
|---|---|
| G 1/8 | 6.5 |
| G 1/4 | 9.5 |

### Version with coil connection Form B industrial standard (cable plug Type 2507)

**With threaded port connection for compressed air**

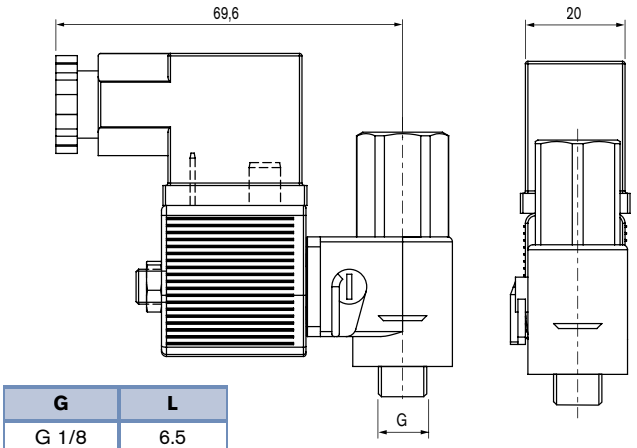


| G | L |
|---|---|
| G 1/8 | 6.5 |
| G 1/4 | 9.5 |

* Was DIN 43650

DTS 1000085707 EN Version: - Status: RL (released | freigegeben | validé) printed: 20.01.2015

## Ordering charts

**Type 6012**

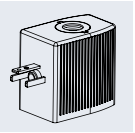

**Solenoid valve in threaded port or sub–base version with electrical coil connection acc. DIN EN 175301–803* Form C for cable plug Type 2506**
**UR / CSA / CE approved**

| Circuit function | Orifice [mm] | Port connection | $C_v$ value Water [GPM] | Pressure range [PSI][1)] | Voltage/ frequency [V/Hz] | Item no. Brass body without manual override | Item no. PA body with manual override |
|---|---|---|---|---|---|---|---|
| C 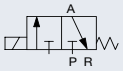  | 1.2 | NPT 1/8 | 0.053 | 0 – 145 | 24/DC | 456 808 E | – |
| | | | | | 24/60 | 456 809 F | – |
| | | | | | 120/60 | 456 810 T | – |
| | | | | | 240/60 | 456 811 Q | – |
| | 1.6 | NPT 1/8 | 0.07 | 0 – 87 | 24/DC | 456 812 R | – |
| | | | | | 24/60 | 456 813 J | – |
| | | | | | 120/60 | 456 814 K | – |
| | | | | | 240/60 | 456 815 L | – |
| | 1.2 | sub–base | 0.053 | 0 – 145 | 24/DC | 456 816 M | 456 824 M |
| | | | | | 24/60 | 456 817 N | 456 825 N |
| | | | | | 120/60 | 456 818 X | 456 826 P |
| | | | | | 240/60 | 456 819 Y | 456 827 Q |
| | 1.6 | sub–base | 0.07 | 0 – 87 | 24/DC | 456 820 V | 456 828 Z |
| | | | | | 24/60 | 456 821 J | 456 829 S |
| | | | | | 120/60 | 456 822 K | 456 830 X |
| | | | | | 240/60 | 456 823 L | 456 831 L |
| D 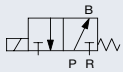  | 1.2 | NPT 1/8 | 0.053 | 0 – 145 | 24/DC | 456 832 M | – |
| | | | | | 24/60 | 456 833 N | – |
| | | | | | 120/60 | 456 834 P | – |
| | | | | | 240/60 | 456 835 Q | – |
| | 1.6 | NPT 1/8 | 0.07 | 0 – 87 | 24/DC | 456 836 R | – |
| | | | | | 24/60 | 456 837 J | – |
| | | | | | 120/60 | 456 838 T | – |
| | | | | | 240/60 | 456 839 U | – |

[1)] Pressure data [PSI]: Overpressure with respect to atmospheric pressure
* Was DIN 43650

- Stainless steel versions available on request.

DTS 1000085707 EN Version: - Status: RL (released | freigegeben | validé) printed: 20.01.2015

## Ordering charts

**Type 6012**

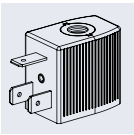

**Solenoid valve with threaded port or sub-base version with electrical coil connection**
**Form B (industrial standard) for cable plug Type 2507**
**UR / CSA / CE approved**

| Circuit function | Orifice [mm] | Port connection | $C_v$ value Water [GPM] | Pressure range [PSI][1)] | Voltage/ frequency [V/Hz] | Item no. Brass body without manual override | Item no. PA body with manual override |
|---|---|---|---|---|---|---|---|
| C 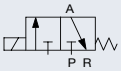 | 1.2 | NPT 1/8 | 0.053 | 0 – 145 | 24/DC | 461 811 M | – |
| | | | | | 24/60 | 461 812 N | – |
| | | | | | 120/60 | 461 813 P | – |
| | | | | | 240/60 | 461 814 Q | – |
| | 1.6 | NPT 1/8 | 0.07 | 0 – 87 | 24/DC | 461 815 R | – |
| | | | | | 24/60 | 461 816 J | – |
| | | | | | 120/60 | 461 817 K | – |
| | | | | | 240/60 | 461 818 U | – |
| | 1.2 | sub–base | 0.053 | 0 – 145 | 24/DC | 461 819 V | 461 827 M |
| | | | | | 24/60 | 461 820 S | 461 828 W |
| | | | | | 120/60 | 461 821 P | 461 829 X |
| | | | | | 240/60 | 461 822 Q | 461 830 U |
| | 1.6 | sub–base | 0.07 | 0 – 87 | 24/DC | 461 823 R | 461 831 R |
| | | | | | 24/60 | 461 824 J | 461 832 J |
| | | | | | 120/60 | 461 825 K | 461 833 K |
| | | | | | 240/60 | 461 826 L | 461 834 L |
| D 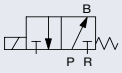 | 1.2 | NPT 1/8 | 0.053 | 0 – 145 | 24/DC | 461 835 M | – |
| | | | | | 24/60 | 461 836 N | – |
| | | | | | 120/60 | 461 837 P | – |
| | | | | | 240/60 | 461 838 Y | – |
| | 1.6 | NPT 1/8 | 0.07 | 0 – 87 | 24/DC | 461 839 Z | – |
| | | | | | 24/60 | 461 840 E | – |
| | | | | | 120/60 | 461 841 T | – |
| | | | | | 240/60 | 461 842 U | – |

[1)] Pressure data [PSI]: Overpressure with respect to atmospheric pressure
* Was DIN 43650

▪ Other versions on request.

DTS 1000085707 EN Version: - Status: RL (released | freigegeben | validé) printed: 20.01.2015

## Ordering charts

### Type 6012P

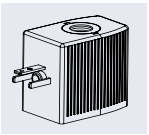

**Pilot valve for direct mounting onto pneumatic actuator with electrical coil connection acc. to DIN EN 175301–803***
**Form C for cable plug Type 2506**
**CE approved only**

| Circuit function | Orifice [mm] | Port connection | $C_v$ value Water [GPM] | Pressure range [PSI][1] | Voltage/ frequency [V/Hz] | Item no. |
|---|---|---|---|---|---|---|
| C 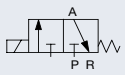  | 1.2 | NPT 1/4 | 1.7 | 0 – 145 | 24/DC | 427 923 B |
| | | | | | 24/60 | 427 924 C |
| | | | | | 120/60 | 428 551 X |
| | | | | | 240/60 | 428 552 Y |
| | | | | | 24/DC | 428 565 V |
| | | | | | 24/60 | 428 566 W |
| | | | | | 120/60 | 428 567 X |
| | | | | | 240/60 | 428 568 G |

- All valves with PA body, NBR seal and manual override.
- Other versions on request.

[1] Pressure data [PSI]: Overpressure with respect to atmospheric pressure
* Was DIN 43650

### Type 6012P

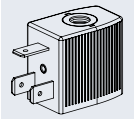

**Pilot valve for direct mounting onto pneumatic actuators with electrical coil connection**
**Form B (industrial standard) for cable plug Type 2507**
**CE approved only**

| Circuit function | Orifice [mm] | $C_v$ value Water [GPM] | Pressure range [PSI][1] | Port connection | Voltage/ frequency [V/Hz] | Item no. |
|---|---|---|---|---|---|---|
| C 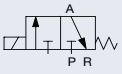  | 1.2 | 1.7 | 0 – 145 | NPT 1/8 | 24/DC | 552 275 E |
| | | | | | 24/60 | 552 276 F |
| | | | | | 120/60 | 552 277 G |
| | | | | | 240/60 | 522 278 R |
| | | | | NPT 1/4 | 24/DC | 522 279 J |
| | | | | | 24/60 | 522 280 G |
| | | | | | 120/60 | 522 281 V |
| | | | | | 240/60 | 522 282 W |

- All valves with PA body, NBR seal and manual override.
- Other versions on request.

[1] Pressure data [PSI]: Overpressure with respect to atmospheric pressure

DTS 1000085707 EN Version: - Status: RL (released | freigegeben | validé) printed: 20.01.2015

## Ordering charts for accessories

### Manifold for Type 6012

| Material | No. of valves | Item no. |
|---|---|---|
| Aluminium | 1 | 613 984 K |
| | 2 | 006 113 M |
| | 3 | 613 838 Y |
| | 4 | 006 114 N |
| | 5 | 613 839 Z |
| | 6 | 613 840 E |
| | 7 | 613 841 T |
| | 8 | 613 842 U |

- Only available with circuit function C (normally open).

**Accessories for manifolds**

| Accessories | Features | Item no. |
|---|---|---|
| Cover plate | for unused valves | 005 100 C |

### Cable plug type 2506 to DIN EN 175301–803* form C



| Accessories | Features | Item no. |
|---|---|---|
| None (standard) | 0 – 260 V AC/DC | 008 353 P |
| with LED | 12 – 24 V AC/DC | 008 402 A |
| with LED and varistor | 12 – 24 V AC/DC | 008 408 Q |
| with rectifier, LED and varistor | 12 – 24 V AC/DC | 008 354 Q |

- Supplied with cable plug: flat seal and fixing screw.
- Other versions of cable plug with circuitry to DIN EN 175301–803* Form C (see *Datasheet Type 2506*).

*) was DIN 43650

### Cable plug type 2507 Form B (industrial standard)



| Accessories | Features | Item no. |
|---|---|---|
| None (standard) | 0 – 260 V AC/DC | 423 845 R |
| with LED | 24 V AC/DC | 423 849 V |
| with LED and freewheeling diode | 12 – 24 V AC/DC | 423 851 P |
| with rectifier, LED and varistor | 12 – 24 V AC/DC | 423 853 R |

- Supplied with cable plug: flat seal and fixing screw.
- Other versions of cable plug with circuitry Form B (industrial standard) (see *Datasheet Type 2507*).

DTS 1000085707 EN Version: - Status: RL (released | freigegeben | validé) printed: 20.01.2015