Brand of NTN corporation

Technical data

UKF211H

Bearing units



Grey cast housing, radial insert ball bearing with adapter sleeve,seal with slinger

KIT CONTENT

UK211G2H, F211

VISUAL (S)

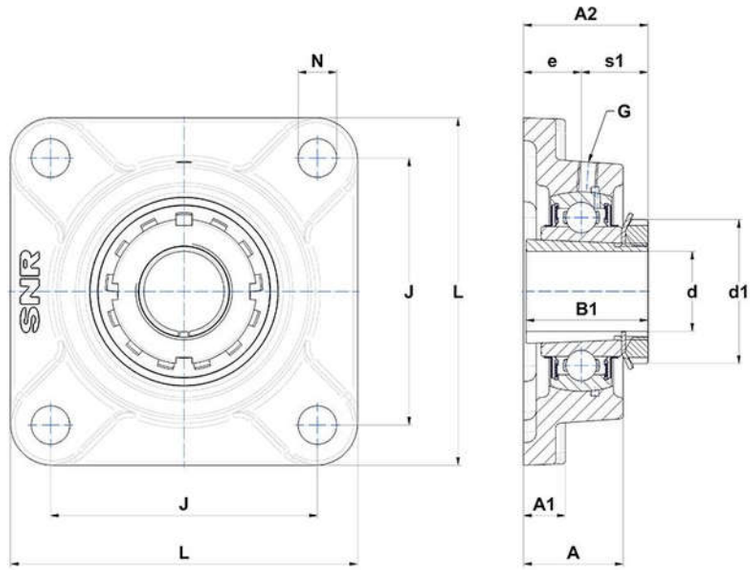

PRODUCT DEFINITION

Brand	SNR
A - Housing height	43 mm
A1 - Housing foot height / flange height	18 mm
A2 - Total height from mounting surface	54 mm
B - Width of Inner Ring	33 mm
B1 - Overall width Inner Ring	59 mm

PRODUCT DEFINITION	
d - Shaft diameter	50 mm
d1 - Outer dia of eccent. Lock. collar / nut of adapter sleeve	75 mm
e - Distance mounting surface to bearing center	25 mm
G - Grease fitting	M6x1
J - Mounting holes distance	130 mm
L - Housing width / diameter	162 mm
N - Mounting hole dimension	19 mm
s1 - Distance nut to middle of bearing raceway	29 mm

PRODUCT PERFORMANCE	
C - Dynamic load rating	43550000 mN
C0 - Static load rating	29200000 mN
Operating temperature min.	253,15 °K
Operating temperature max.	373,15 °K

OTHER FEATURES	
Mass	3,4 kg
Adapter sleeve designation	H2311