Basic 2 Plate, Adjustable Friction Clutch with Set Screw & Clamp Style Fixing

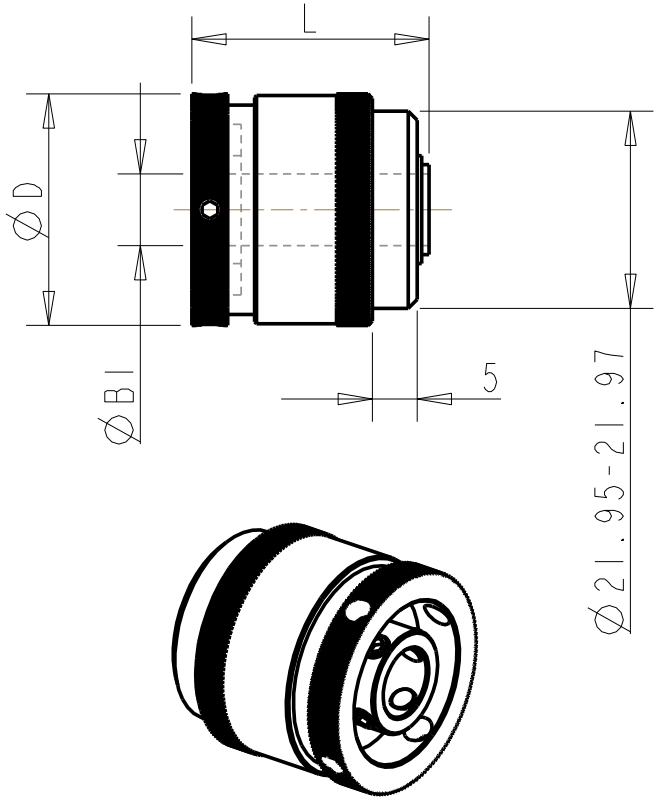

Ref. 271
Set Screw Fixing

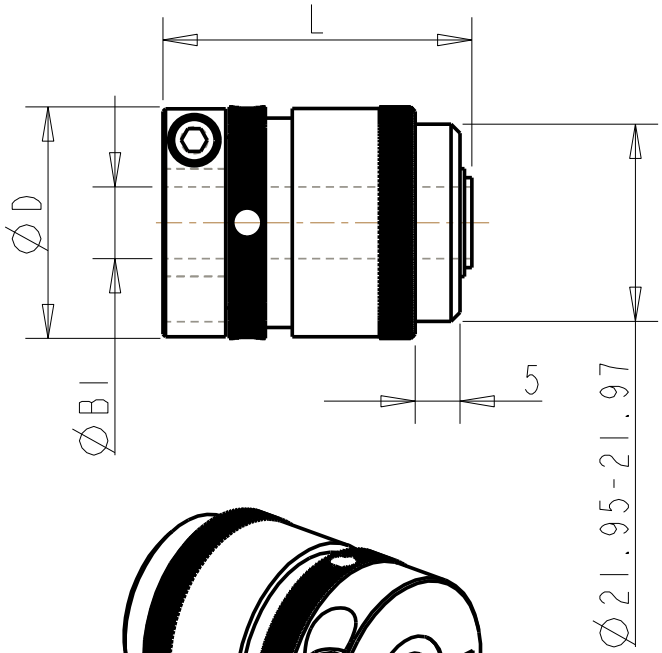

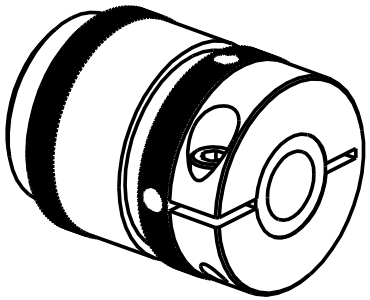

Ref 41
Clamp Fixing

All Dimensions in mm

NOT TO SCALE

1. Maximum shaft penetration

					Fastener at B1		Fastener at B2	
Ref. No.	∅D	L	L1 (1)	L2	∅B1 Max	Screw	∅B2 Max	Screw
271.25	25.8	26.4	thru'	-	8	M3	-	-
401.25	25.8	34.4	thru'	-	8	M3	-	-