Brand of NTN corporation

Technical data

USPAE206

Bearing units



Grey cast housing, radial insert ball bearing with socket set screws, single lip seal

KIT CONTENT

US.206.G2, PAE206

VISUAL (S)

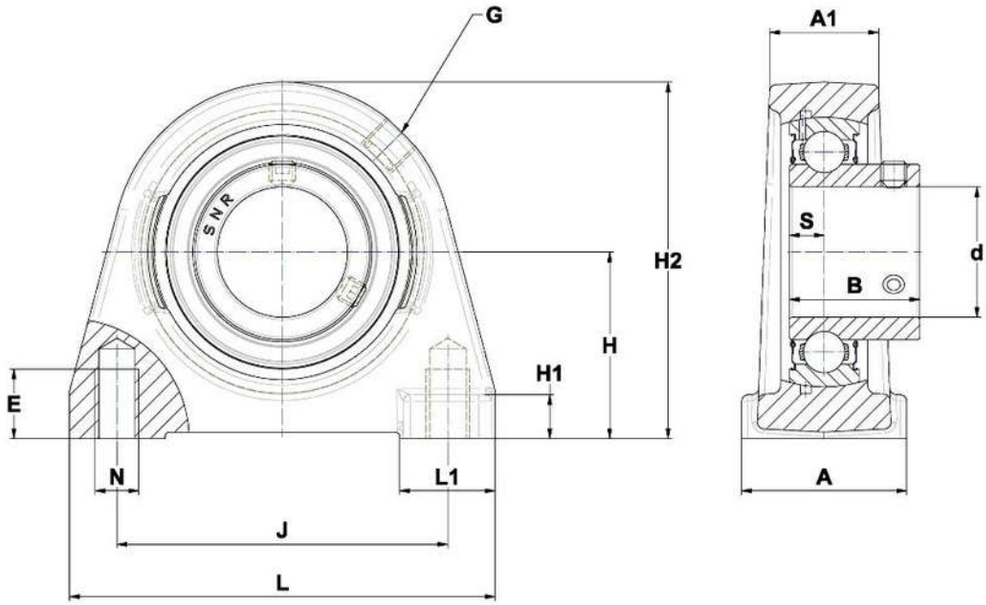

PRODUCT DEFINITION

Brand	SNR
A - Housing width	38 mm
A1 - Housing top width	25 mm
B - Width of Inner Ring	30 mm
d - Shaft diameter	30 mm
E - Mounting hole thread depth	12,5 mm

PRODUCT DEFINITION	
G - Grease fitting	R1/8"
H - Distance mounting base to centerline spheric. seating diam.	42,9 mm
H1 - Housing foot height	11 mm
H2 - Housing height	82 mm
J - Mounting holes distance	76,2 mm
L - Housing length	98 mm
L1 - Housing foot length	22 mm
N - Mounting hole dimension	M10
S - Distance front side/bearing centre	8 mm

PRODUCT PERFORMANCE	
C - Dynamic load rating	19500000 mN
C0 - Static load rating	11200000 mN
Operating temperature min.	253,15 °K
Operating temperature max.	373,15 °K

OTHER FEATURES	
Mass	0,9 kg
Recommended tightening torque for set screw	5.5 N-m