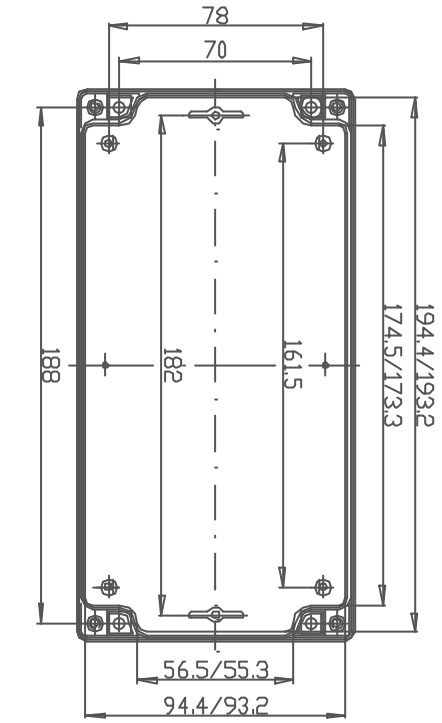
78
70
188
182
161.5
174.5/173.3
194.4/193.2
56.5/55.3
94.4/93.2

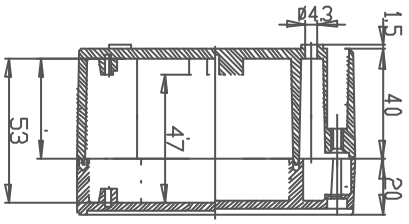
ø4.3
1.5
40
20
53
47

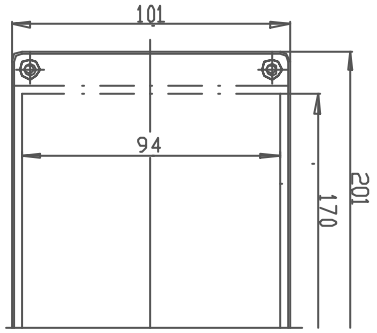
101
94
201
170