

Continuous light, red

Part no. SL7-L-R
Article no. 171435

Catalog No. SL7-L-R

Delivery programme

Product range			SL7 signal towers
Basic function			Card for filament lamp
Protection type			IP66
Rated operational voltage	U_e	V	< 250 V AC/DC
Description			without light elements
Type of light			Continuous light
Light elements			Filament lamp max. 7 W
Colour			
			Red
			
Function			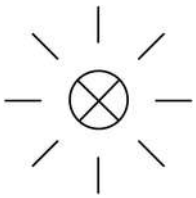
Connection to SmartWire-DT			no

Approvals

Product Standards	IEC/EN 60947-5-1; UL 508; CSA-C22.2 No. 14-10; CSA-C22.2 No. 94-91; CE marking
UL File No.	E29184
UL Category Control No.	NKCR
CSA File No.	UL report applies to both US and Canada
CSA Class No.	NKCR7
North America Certification	UL listed, certified by UL for use in Canada
Degree of Protection	UL Type 4, 4X, 13

General

Standards			IEC/EN 60947-5-1
Climatic proofing			Damp heat, constant, to IEC 60068-2-78 Damp heat, cyclic, to IEC 60069-2-30
Mounting position			As required
Mechanical shock resistance		g	> 15 according to IEC 60068-2-27 Shock duration 11 ms Sinusoidal
IEC degree of protection			IP66 IEC/EN 60529
Protection type UL			Type 4, 4X, 13
Material			Enclosure: Polycarbonate (PC), black Cap: Polycarbonate (PC)
Cap colour			
			Red
Ambient temperature		°C	-30 - +60
Number of signal elements			Max. 5 with standard base Max. 10 with base for mounting on both sides
Weight		g	80

Contacts

Rated impulse withstand voltage	U_{imp}	V AC	4000
Rated insulation voltage	U_i	V	250
Overvoltage category/pollution degree			III/3

modules

Type of light			Continuous light
Light elements			Filament lamp max. 7 W
Mounting			Ba15d
Leakage current		A	< 0.003
lifespan		h	> 3000
Transmission angle			360°
Current-/power consumption			
Power consumption			Max. 7 W with the specified voltages
Voltage levels			up to 250 V AC/DC

Technical data ETIM 5.0

Low-voltage industrial components (EG000017) / Optical module for signal tower (EC000232)

Electric engineering, automation, process control engineering / Low-voltage switch technology / Command and alarm device / Optical module for signal tower (ecl@ss8-27-37-12-20 [AKF038010])

Function			Continuous light
Colour			Red
Outer diameter		mm	73
Degree of protection (IP)			IP66
Operating voltage at AC 50 Hz		V	24 - 250
Operating voltage at AC 60 Hz		V	24 - 250
Operating voltage at DC		V	24 - 250
Voltage type			AC/DC
Type of lamp			None
Colour housing			Black

Dimensions

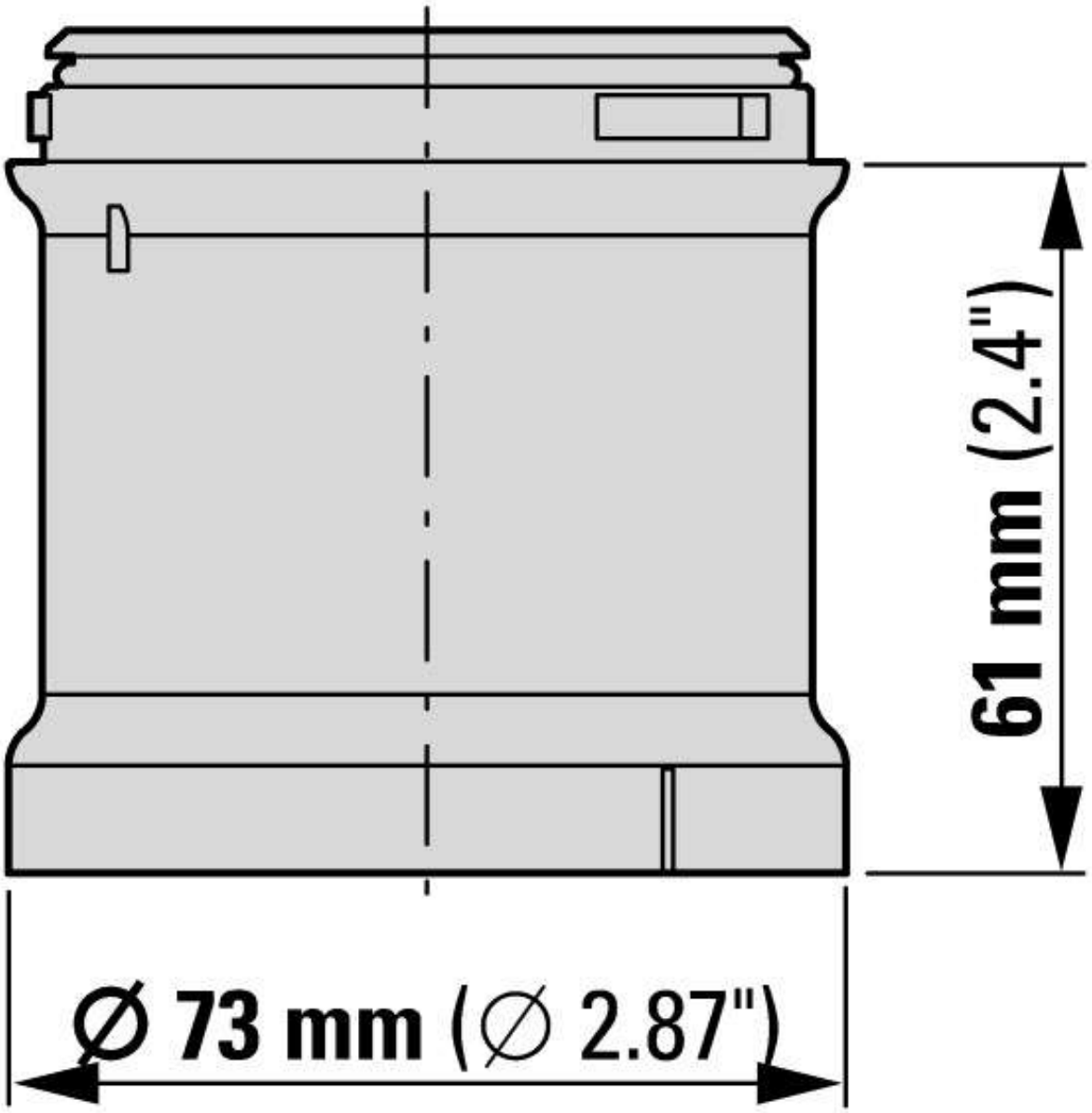

Additional product information (links)

IL047005ZU SL4/7 Incandescent Modules	
IL047005ZU SL4/7 Incandescent Modules	ftp://ftp.moeller.net/DOCUMENTATION/AWA_INSTRUCTIONS/IL047005ZU2013_02.pdf
IL047005ZU SL4/7 modules de lampes à incandescence	ftp://ftp.moeller.net/DOCUMENTATION/AWA_INSTRUCTIONS/IL047005ZU2013_02.pdf

© 07/2014 by Eaton Industries GmbH