E11589

Socket with CAN bus terminating resistor

SDOGH050ZDAFKPG

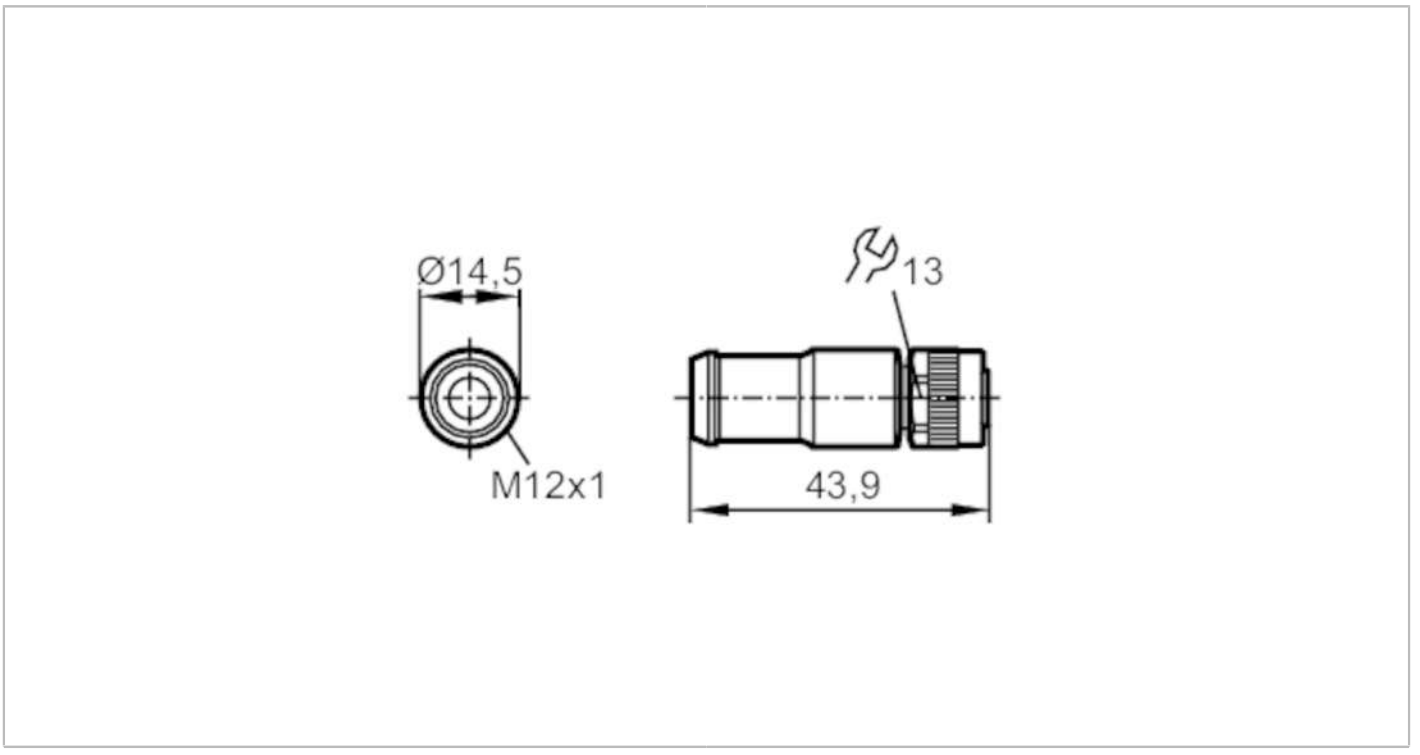

Application		
Application		CAN bus
Operating conditions		
Ambient temperature	[°C]	-40...85
Protection		IP 68
Mechanical data		
Weight	[g]	7.7
Dimensions	[mm]	14.5 x 14.5 x 43.9
Materials		TPU; Sealing: FKM
Moulded-body material		TPU
Material nut		diecast zinc, nickel-plated
Remarks		
Pack quantity		1 pcs.

Electrical connection - socket

Connector: 1 x M12, straight; coding: A; Moulded body: TPU; Locking: diecast zinc, nickel-plated



E11589

Socket with CAN bus terminating resistor

SDOGH050ZDAFKPG

Connection

