Brand of NTN corporation

Technical data

UCPE213

Bearing units



Grey cast housing, radial insert ball bearing with socket set screws,seal with slinger

KIT CONTENT

UC213G2, PE213

VISUAL (S)

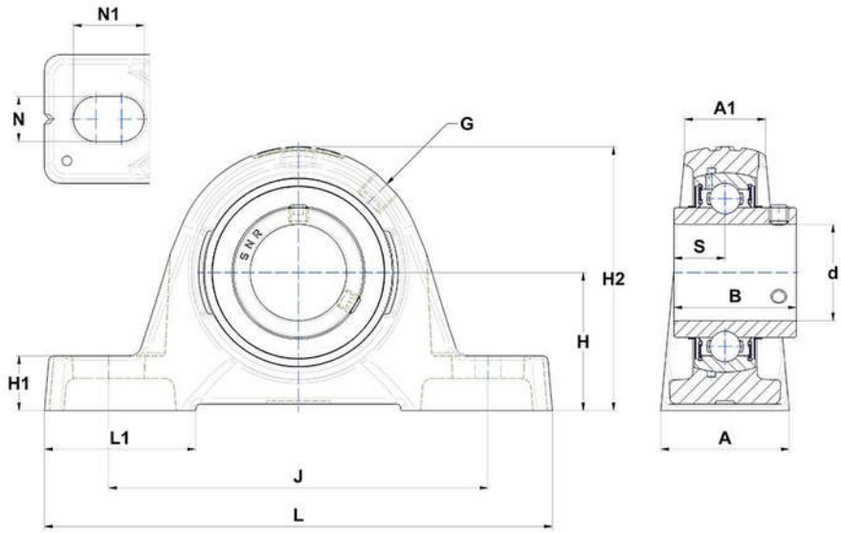

PRODUCT DEFINITION

Brand	SNR
A - Housing width	65 mm
A1 - Housing top width	44 mm
B - Width of Inner Ring	65,1 mm
d - Shaft diameter	65 mm
G - Grease fitting	R1/8"

NTN Europe
1 rue des Usines · BP 2017 · 74010 Annecy Cedex · France · Tel. +33 (0)4 50 65 30 00
S.A. au capital de 322 639 919 € · RCS ANNECY B 325 821 072 · Id. Fiscale : FR 48 325 821 072
SIRET 325 821 072 00015 · Code APE 2815 Z · Code NACE 28.15

PRODUCT DEFINITION	
H - Distance mounting base to centerline spheric. seating diam.	79,4 mm
H1 - Housing foot height	27,5 mm
H2 - Housing height	156 mm
J - Mounting holes distance	203 mm
L - Housing length	260 mm
L1 - Housing foot length	77 mm
N - Mounting hole dimension	22 mm
N1 - Mounting hole length	28 mm
S - Distance front side/bearing centre	25,4 mm

PRODUCT PERFORMANCE	
C - Dynamic load rating	57200000 mN
C0 - Static load rating	40000000 mN
Operating temperature min.	253,15 °K
Operating temperature max.	373,15 °K

OTHER FEATURES	
Mass	6,36 kg
Recommended tightening torque for set screw	33 N-m