DATASHEET - EASY620-DC-TE



I/O expansion, 24 V DC, 12DI, 8DO-Trans, easyLink

Part no.	**EASY620-DC-TE**
Catalog No.	**212313**
EL-Nummer (Norway)	**4520946**

Delivery program

Product range			Control relay easyRelay Multi-function-display MFD-Titan
Product range			Remote I/O systems Compact PLCs
Subrange			I/O expansions digital
Basic function			Expansions
Description			Can be used through easyLink
Function			Expansions EASY…
Accessories			I/O expansions, digital
Inputs			
Inputs expansion (number)			digital: 12
Outputs			
Transistor			8
Supply voltage			24 V DC
For use with			easy700 easy800 EC4P MFD-CP8..

Technical data

General

Weight		kg	0.3

Climatic environmental conditions

Operating ambient temperature		°C	-25 to + 55 cold as per IEC 60068-2-1 heat as per IEC 60068-2-2
Condensation			Take appropriate measures to prevent condensation
Storage	ϑ	°C	-40 - +70
relative humidity		%	5 - 95
Air pressure (operation)		hPa	795 - 1080

Ambient conditions, mechanical

Protection type (IEC/EN 60529, EN50178, VBG 4)			IP20
Vibrations (IEC/EN 60068-2-6)		Hz	
Constant amplitude 0.15 mm		Hz	10 - 57
Constant acceleration 2 g		Hz	57 - 150
Mechanical shock resistance (IEC/EN 60068-2-27) semi-sinusoidal 15 g/11 ms		Impacts	18
Drop to IEC/EN 60068-2-31	Drop height	mm	50
Free fall, packaged (IEC/EN 60068-2-32)		m	1
Mounting position			Vertical or horizontal

Electromagnetic compatibility (EMC)

Overvoltage category/pollution degree			II/2
Electrostatic discharge (ESD)			
applied standard			IEC/EN 61000-4-2, Level 3
Air discharge		kV	8
Contact discharge		kV	6
Burst		kV	according to IEC/EN 61000-4-4 Supply cables: 2 Signal cables: 2
power pulses (Surge)			2 kV (supply cables, symmetrical, EASY...AC) 0.5 kV (supply cables, symmetrical, easy-DC) according to IEC/EN 61000-4-5

Immunity to line-conducted interference to (IEC/EN 61000-4-6)		V	10

Insulation resistance

Insulation resistance			EN 50178

Power supply

Rated operational voltage	U_e	V	24 DC (-15/+20%)
Rated operational voltage	U_e	V	24 DC (-15/+20%)
Permissible range	U_e		20.4 - 28.8 V DC
Residual ripple		%	≦ 5
Input current			140 mA at U_e
Voltage dips		ms	≤ 10
Heat dissipation	P		3.4 W

Digital inputs 24 V DC

Number			12
Status Display			LCD-Display
Potential isolation			from the outputs: yes
Rated operational voltage	U_e	V DC	24
Input voltage		V DC	< 5 (I1 - I12, R1 - R12) at signal "0"
Input current on 1 signal			
Input current at signal 1		mA	3.3 (R1 to R6 (R12))
Deceleration time		ms	20 (from “0” to “1”, debounce ON) Normally 0.25 (R1 - R12) (from “0” to “1”, debounce OFF) 20 (from “1” to “0”, debounce ON)
Cable length		m	100 (unshielded)

Transistor outputs

Number			8
Rated operational voltage	U_e	V DC	24
Permissible range	U_e		20.4 - 28.8 V DC
Residual ripple		%	5
Supply current		mA	Norm./max. 18/32 at signal 0 24/44 at signal 1
Protection against polarity reversal			yes (Caution: A short circuit will result if 0 V or earth is applied to the outputs in the event that the supply voltage is connected to the wrong poles.)
Potential isolation			from power supply, inputs to the memory card: yes
Rated operational current at signal „1” DC per channel	I_e	A	Max. 0.5
Lamp load without R_v per channel		W	5
Residual current on 0 signal per channel		mA	< 0.1
Max. output voltage		V	2.5 (signal 0 at external load < 10 MΩ) $U = U_e$ - 1 V (signal 1 at I_e = 0.5 A)
Short-circuit protection			Yes, thermal (analysis via diagnostics input I16, I15; R15, R16)
Total short-circuit current		A	16
Peak short-circuit current		A	32
Thermal cutout			Yes
Max. operating frequency with constant resistive load		Operations/h	40000
Parallel connection of outputs			
With resistive load, inductive load with external suppressor circuit, combination within a group			Group 1: S1 - S4 Group 2: S5 - S8
Number of outputs	max.		4
Max. total current		A	2 (Caution! Outputs must be actuated simultaneously and for the same length of time.)
Output status indication			LCD display (if provided)

Relay outputs

Potential isolation			from power supply: yes From the inputs: yes in groups Safe isolation according to EN 50178: 300 V AC Basic isolation: 600 V AC

Supply voltage U_{Aux}

Protection against polarity reversal			yes (Caution: A short circuit will result if 0 V or earth is applied to the outputs in the event that the supply voltage is connected to the wrong poles.)

Design verification as per IEC/EN 61439

Technical data for design verification			
Rated operational current for specified heat dissipation	I_n	A	0
Heat dissipation per pole, current-dependent	P_{vid}	W	0
Equipment heat dissipation, current-dependent	P_{vid}	W	0
Static heat dissipation, non-current-dependent	P_{vs}	W	3.4
Heat dissipation capacity	P_{diss}	W	0
Operating ambient temperature min.		°C	-25
Operating ambient temperature max.		°C	55
IEC/EN 61439 design verification			
10.2 Strength of materials and parts			
10.2.2 Corrosion resistance			Meets the product standard's requirements.
10.2.3.1 Verification of thermal stability of enclosures			Meets the product standard's requirements.
10.2.3.2 Verification of resistance of insulating materials to normal heat			Meets the product standard's requirements.
10.2.3.3 Verification of resistance of insulating materials to abnormal heat and fire due to internal electric effects			Meets the product standard's requirements.
10.2.4 Resistance to ultra-violet (UV) radiation			Meets the product standard's requirements.
10.2.5 Lifting			Does not apply, since the entire switchgear needs to be evaluated.
10.2.6 Mechanical impact			Does not apply, since the entire switchgear needs to be evaluated.
10.2.7 Inscriptions			Meets the product standard's requirements.
10.3 Degree of protection of ASSEMBLIES			Meets the product standard's requirements.
10.4 Clearances and creepage distances			Meets the product standard's requirements.
10.5 Protection against electric shock			Does not apply, since the entire switchgear needs to be evaluated.
10.6 Incorporation of switching devices and components			Does not apply, since the entire switchgear needs to be evaluated.
10.7 Internal electrical circuits and connections			Is the panel builder's responsibility.
10.8 Connections for external conductors			Is the panel builder's responsibility.
10.9 Insulation properties			
10.9.2 Power-frequency electric strength			Is the panel builder's responsibility.
10.9.3 Impulse withstand voltage			Is the panel builder's responsibility.
10.9.4 Testing of enclosures made of insulating material			Is the panel builder's responsibility.
10.10 Temperature rise			The panel builder is responsible for the temperature rise calculation. Eaton will provide heat dissipation data for the devices.
10.11 Short-circuit rating			Is the panel builder's responsibility.
10.12 Electromagnetic compatibility			Is the panel builder's responsibility.
10.13 Mechanical function			The device meets the requirements, provided the information in the instruction leaflet (IL) is observed.

Technical data ETIM 7.0

PLC's (EG000024) / Logic module (EC001417)			
Electric engineering, automation, process control engineering / Control / Programmable logic control (SPS) / Logic module (ecl@ss10.0.1-27-24-22-16 [AKE539014])			
Supply voltage AC 50 Hz		V	0 - 0
Supply voltage AC 60 Hz		V	0 - 0
Supply voltage DC		V	20.4 - 28.8
Voltage type of supply voltage			DC
Switching current		A	0.5
Number of analogue inputs			0
Number of analogue outputs			0
Number of digital inputs			12
Number of digital outputs			8
With relay output			No
Number of HW-interfaces industrial Ethernet			0
Number of interfaces PROFINET			0
Number of HW-interfaces RS-232			0
Number of HW-interfaces RS-422			0
Number of HW-interfaces RS-485			0
Number of HW-interfaces serial TTY			0

Number of HW-interfaces USB		0
Number of HW-interfaces parallel		0
Number of HW-interfaces Wireless		0
Number of HW-interfaces other		1
With optical interface		No
Supporting protocol for TCP/IP		No
Supporting protocol for PROFIBUS		No
Supporting protocol for CAN		No
Supporting protocol for INTERBUS		No
Supporting protocol for ASI		No
Supporting protocol for KNX		No
Supporting protocol for MODBUS		No
Supporting protocol for Data-Highway		No
Supporting protocol for DeviceNet		No
Supporting protocol for SUCONET		No
Supporting protocol for LON		No
Supporting protocol for PROFINET IO		No
Supporting protocol for PROFINET CBA		No
Supporting protocol for SERCOS		No
Supporting protocol for Foundation Fieldbus		No
Supporting protocol for EtherNet/IP		No
Supporting protocol for AS-Interface Safety at Work		No
Supporting protocol for DeviceNet Safety		No
Supporting protocol for INTERBUS-Safety		No
Supporting protocol for PROFIsafe		No
Supporting protocol for SafetyBUS p		No
Supporting protocol for other bus systems		No
Radio standard Bluetooth		No
Radio standard WLAN 802.11		No
Radio standard GPRS		No
Radio standard GSM		No
Radio standard UMTS		No
IO link master		No
Redundancy		No
With display		No
Degree of protection (IP)		IP20
Basic device		No
Expandable		No
Expansion device		Yes
With timer		No
Rail mounting possible		Yes
Wall mounting/direct mounting		Yes
Front build in possible		No
Rack-assembly possible		No
Suitable for safety functions		No
Category according to EN 954-1		None
SIL according to IEC 61508		None
Performance level acc. EN ISO 13849-1		None
Appendant operation agent (Ex ia)		No
Appendant operation agent (Ex ib)		No
Explosion safety category for gas		None
Explosion safety category for dust		None
Width	mm	107.5
Height	mm	90
Depth	mm	60

Approvals

Product Standards	IEC/EN see Technical Data; UL 508; CSA C22.2 No. 142-M1987; CSA C22.2 No. 213-M1987; CE marking
UL File No.	E135462
UL Category Control No.	NRAQ, NRAQ7
CSA File No.	012528
CSA Class No.	2252-01 + 2258-02
North America Certification	UL listed, CSA certified
Degree of Protection	IEC: IP20, UL/CSA Type: -

Dimensions

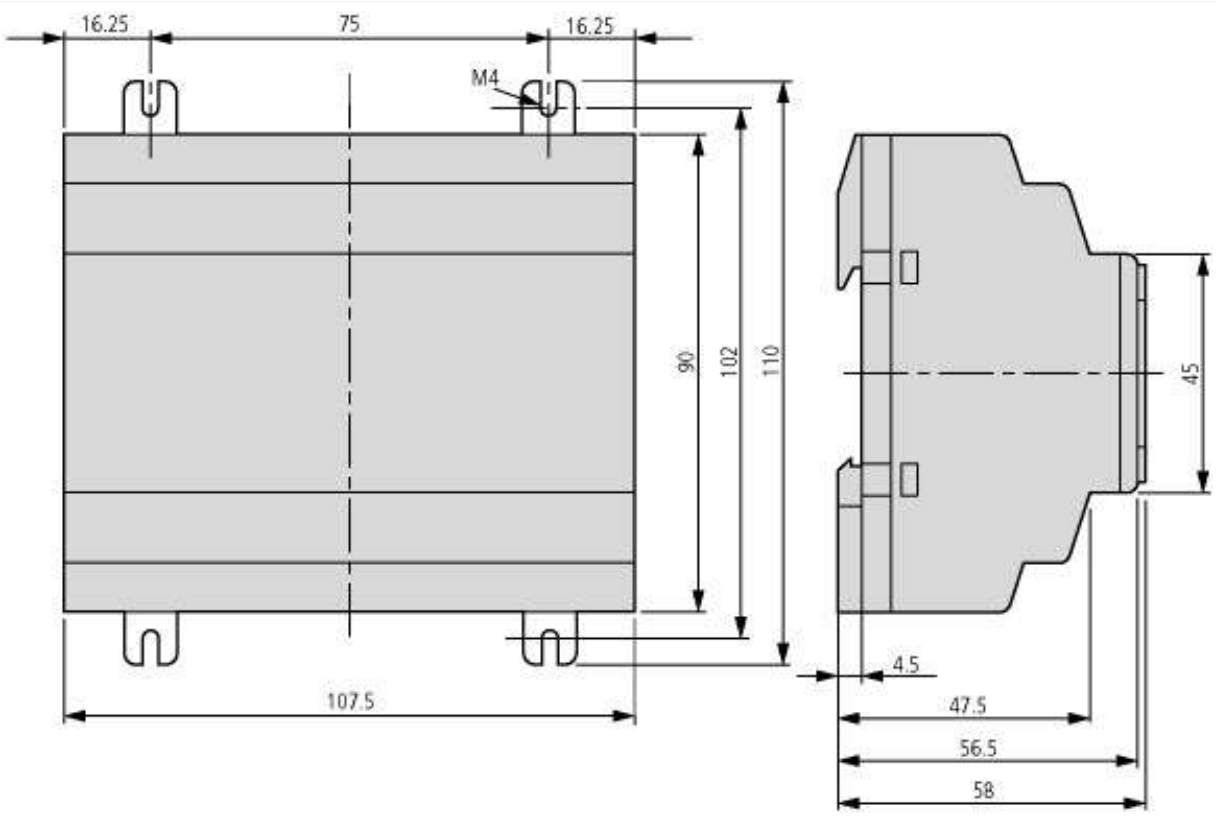

Additional product information (links)

Instruction leaflet "easyControl: compact PLC" IL05003003Z (AWA2724-2334)	
Instruction leaflet "easyControl: compact PLC" IL05003003Z (AWA2724-2334)	https://es-assets.eaton.com/DOCUMENTATION/AWA_INSTRUCTIONS/IL05003003Z2018_02.pdf
Instruction leaflet "easy control relays" IL05013006Z (AWA2528-1837)	
Instruction leaflet "easy control relays" IL05013006Z (AWA2528-1837)	https://es-assets.eaton.com/DOCUMENTATION/AWA_INSTRUCTIONS/IL05013006Z2018_02.pdf
Instruction leaflet "easy control relays" IL05013012Z (AWA2528-1979)	
Instruction leaflet "easy control relays" IL05013012Z (AWA2528-1979)	https://es-assets.eaton.com/DOCUMENTATION/AWA_INSTRUCTIONS/IL05013012Z2010_11.pdf
Instruction leaflet "easy control relays" IL05013012Z (AWA2528-1979)	https://es-assets.eaton.com/DOCUMENTATION/AWA_INSTRUCTIONS/IL05013012Z2018_02.pdf
Manual "easy800 control relays" MN04902001Z (AWB2528-1423)	
Handbuch „Steuerrelais easy800“ MN04902001Z (AWB2528-1423) - Deutsch	https://es-assets.eaton.com/DOCUMENTATION/AWB_MANUALS/MN04902001Z_DE.pdf
Manual "easy800 control relays" MN04902001Z (AWB2528-1423) - English	https://es-assets.eaton.com/DOCUMENTATION/AWB_MANUALS/MN04902001Z_EN.pdf

© 04/2021 by Eaton Industries GmbH