IGC228

Inductive sensor

IGK3005-BPKG/M/US-104-DPS

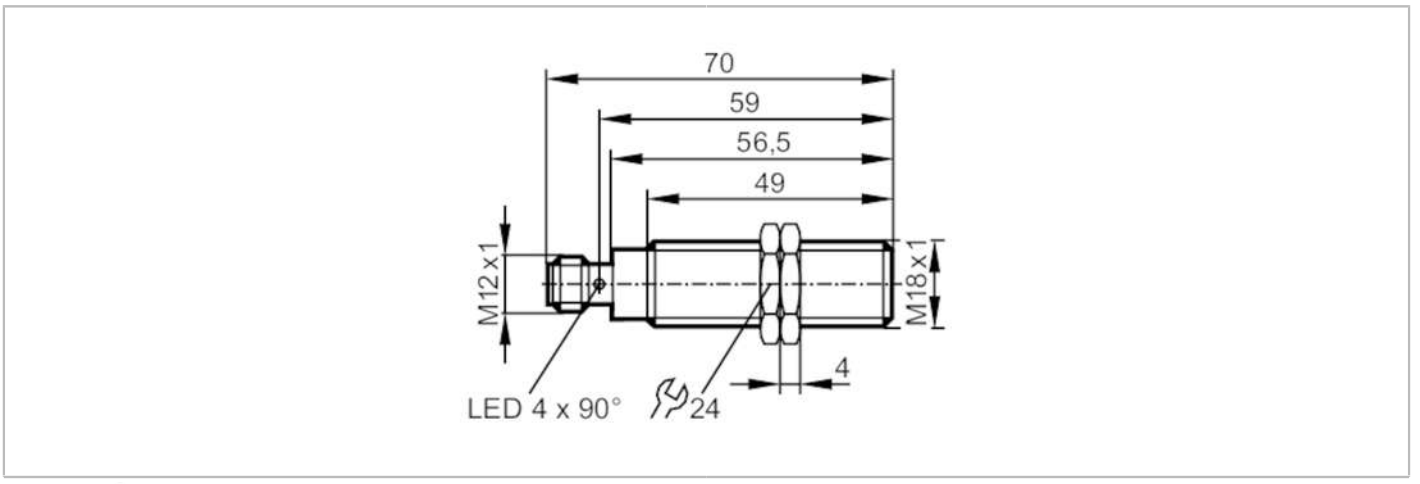

Product characteristics		
Electrical design		PNP
Output function		normally open
Sensing range	[mm]	5
Housing		threaded type
Dimensions	[mm]	M18 x 1 / L = 70
Application		
Special feature		Gold-plated contacts
Application		Use in machine tools, coolants and lubricants
Electrical data		
Operating voltage	[V]	10...36 DC
Current consumption	[mA]	< 10
Protection class		II
Reverse polarity protection		yes
Outputs		
Electrical design		PNP
Output function		normally open
Max. voltage drop switching output DC	[V]	2.5
Permanent current rating of switching output DC	[mA]	200
Switching frequency DC	[Hz]	400
Short-circuit protection		yes
Type of short-circuit protection		pulsed
Overload protection		yes
Detection zone		
Sensing range	[mm]	5
Real sensing range Sr	[mm]	5 ± 10 %
Operating distance	[mm]	0...4.05

IGC228

Inductive sensor

IGK3005-BPKG/M/US-104-DPS

Accuracy / deviations			
Correction factor		steel: 1 / stainless steel: 0.7 / brass: 0.5 / aluminium: 0.5 / copper: 0.4	
Hysteresis	[% of Sr]	1...20	
Switch point drift	[% of Sr]	-10...10	
Operating conditions			
Ambient temperature	[°C]	-25...70	
Protection		IP 68; ("Coolant")	
Tests / approvals			
EMC		EN 61000-4-2 ESD	4 kV CD / 8 kV AD
		EN 61000-4-3 HF radiated	10 V/m
		EN 61000-4-4 Burst	2 kV
		EN 61000-4-5 Surge	0,5 kV
		EN 61000-4-6 HF conducted	10 V
		EN 55011	class B
MTTF	[years]	1689	
UL approval		Ta	0...40 °C
		Enclosure type	Type 1
		power supply	Hazardous voltage
		File number UL	E174191
Mechanical data			
Weight	[g]	54.5	
Housing		threaded type	
Mounting		flush mountable	
Dimensions	[mm]	M18 x 1 / L = 70	
Thread designation		M18 x 1	
Materials		brass white bronze coated; sensing face: LCP uncoloured	
Displays / operating elements			
Display		switching status	4 x 90° LED, yellow
Accessories			
Items supplied		lock nuts: 2	
Remarks			
Pack quantity		1 pcs.	

Electrical connection - plug

Connector: 1 x M12; coding: A; Contacts: gold-plated



IGC228

Inductive sensor

IGK3005-BPKG/M/US-104-DPS

Connection

