Hi-Force®

HPS - SINGLE ACTING LOW HEIGHT PAD CYLINDERS

B



- Capacities from 4.5 to 147 tonnes
- Stroke lengths from 6 to 16mm
- Working pressure 700 Bar

The HPS pad cylinder range offers the best capacity, closed height and stroke length combination, spring assisted return cylinders in the industry. Ideally suited for applications where a low closed height and maximum possible stroke is of prime importance, these highly versatile cylinders are extensively used for maintenance, structural weld positioning, rigging, flange separating and many other applications.

- ›› Single acting, spring assisted return
- ›› Nitrocarburised piston rod
- ›› Low friction bearing surfaces
- ›› Anti-extrusion seals

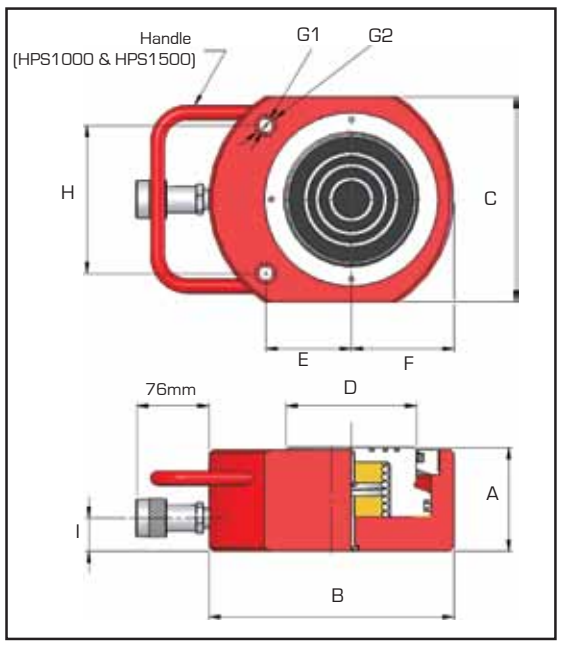





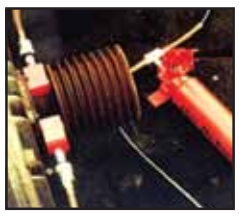

Model number	Capacity tonnes	Stroke mm	Oil cap. cm^3	Cyl. eff. area cm^2	Weight kg
HPS50	4.5	6	4	6.4	0.8
HPS51	4.5	16	10	6.4	0.9
HPS100	10	10	14	14.4	1.6
HPS200	20	11	31	28.6	2.6
HPS300	32	12	55	45.6	4.2
HPS500	50	15	107	71.3	6.6
HPS750	73	16	164	102.7	10.4
HPS1000	109	16	245	153.4	23.2
HPS1500	147	16	330	206.2	28.5

Dimensions in mm										
A	B	C	D	E	F	G1	G2	H	I
32	60	38	24	20	19	5.6	9.75	26	19
42	60	38	24	20	19	5.6	9.75	26	19
46	81	56	38	34	28	6.8	11.25	37	19
52	100	76	51	40	39	8.8	14.25	50	19
59	115	95	60	46	48	8.8	14.25	52	19
67	140	114	70	54	60	10.8	17.25	67	20
81	165	140	82	67	70	13.0	19.00	76	21
91	215	180	114	75	90	12.8	19.00	130	29
100	215	191	114	83	95	13.0	19.00	117	29