Staircase lighting timer electronic

E1ZT

Series ENYA
Switch-off warning
Retrigger, time extension function programmable
Energy saving function
Impulse switch mode selectable
Low switching noise
High switching capacity, 80A peak inrush current
Automatic 3/4 - wire detection
Push-button glow lamp load up to 100mA
Width 17.5 mm
Installation design



Technical data

1. Functions
Electronic staircase lighting timer with switch-off warning.
The control input allows the connection of pushbuttons with a total glow lamp load up to 100mA and enables the application in 3- or 4-wire circuits. The unit can be retriggered via the connected pushbuttons.
A long keypress will switch off the light (energy saving function).
A fast sequence of pushes (pumping) will extend the period to a multiple of the selected value. Depending upon distinct type, the following operating methods can be selected by the controls on the unit:

- TW Automatic timer with switch-off warning
- T Automatic timer without switch-off warning
- 1 Steady light (ON)
- 0 Switch-off
- P Impulse switch mode without time function (only types with option P)
- PN Impulse switch mode power fail latch (only types with option PN)

Function sets on distinct types are according to table ordering information or printing on the unit.

2. Time range

	Adjustment range
Time	0,5 - 12min (in function T, TW)

3. Indicators

Green LED U ON:	indication of supply voltage
Yellow LED ON/OFF:	indication of relay output

4. Mechanical design
Self-extinguishing plastic housing, IP rating IP 40
Mounted on DIN-rail TS 35 according to EN 60715
Mounting position: any
Shockproof terminal connection according to VBG 4 (PZ1 required), IP rating IP20
Tightening torque: max. 1Nm
Terminal capacity:
1 x 0.5 to 2.5mm² with/without multicore cable end
1 x 4mm² without multicore cable end
2 x 0.5 to 1.5mm² with/without multicore cable end
2 x 2.5mm² flexible without multicore cable end

5. Input circuit

Supply voltage:	239V a.c. terminals L - N
Tolerance:	-15% to +10%
Rated consumption:	2VA (1,0W)
Rated frequency:	a.c. 48 to 63Hz
Duty cycle:	100%
Reset time:	500ms
Hold-up time:	-
Residual ripple for d.c.:	-
Drop out voltage:	>30%
Overvoltage category:	III (in accordance with IEC 60664-1)
Rated surge voltage:	4kV

6. Output

1 normally open contact	terminals L - 18
Rated voltage:	250V a.c.
Switching capacity:	10A continuous current
If the distance between the devices is less than 5mm.	
Switching capacity:	16A continuous current
If the distance between the devices is greater than 5mm.	
Start-up peak (20ms):	80A
Mechanical life:	30 x 10^6 operations
Electrical life	
Resistive load:	10^5 operations at 16A 250V
Lamp load:	80.000 operations at 1000W 250V

7. Control input B1

Connection not potential free:	pushbutton B1-N (3-conductor circuit) pushbutton B1-L (4-conductor circuit)
Glow lamp load:	max. 100mA parallel to the pushbuttons
Overload prodection:	yes, electronic

8. Additional control input (only types with option C)

Connection:	control voltage on terminals C1(+)-C2
Voltage range:	8 ... 230V a.c./d.c.
Galvanic isolation:	yes, basic isolation
Overvoltage category:	III (in accordance with IEC 60664-1)
Rated surge voltage:	4kV

9. Accuracy

Base accuracy:	±5% of maximum scale value
Adjustment accuracy:	<15% of maximum scale value
Repedition accuracy:	<2%
Voltage influence:	-
Temperature influence:	≤1%

10. Ambient conditions

Ambient temperature:	-25 to +55°C
Storage temperature:	-25 to +70°C
Transport temperature:	-25 to +70°C
Relative humidity:	15% to 85% (in accordance with IEC 60721-3-3 class 3K3)
Pollution degree:	2 (in accordance with IEC 60664-1)

11. Weight

Single packing:	106g

Functions

Function automatic timer (T, TW):
After the pushbutton at B1 has been pressed, the output relay R closes (terminals L-18) and the set interval t begins. If the pushbutton is pressed again before the interval t has expired, the interval begins again (restart function complies with EN 60669-2-3). Rapid, multiple pressing of the pushbutton (pumping) adds 2, 3 or more time intervals to extend the time up to 60min. Prolonged pressure on the button (>2s) aborts the interval running and switches the relay off (energy saving function). In the TW mode the device provides a switch-off warning (in accordance with DIN 180-158-2) by generating short pulses (flashing) at 30s, 15s and 5s prior to switch-off.

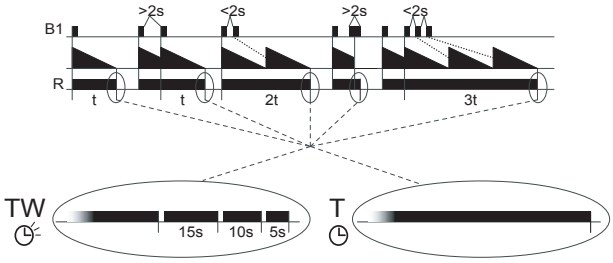

Operating possibilities at B1 in mode T and TW:

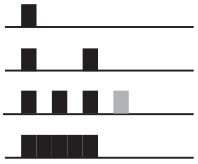

Switch ON
Retrigger
Time extension function (pumping)
Switch OFF

The additional control input C1-C2 can be used in the T and TW modes to control the staircase lighting timer with a voltage of 8 to 230V a.c. /d.c. . This input can be used to start and restart the cycle. It cannot be used for switch-off (energy saving function) or for programming long intervals (pumping).

Impulse switch mode (P), (PN):
In this mode, every keypress toggles the output relay R (flip-flop). In function P, the output relay R remains in off-position, whenever the supply voltage is applied.
In function PN, the output relay R switches into on-position after applying the supply voltage U, if the output relay R was in on-position last before power failure. The output relay R switches into on-position, if a short voltage impulse (<2s) is applied to the additional control input (C1-C2) (central ON). A longer voltage impulse (>2s) opens the output relay R (central OFF).

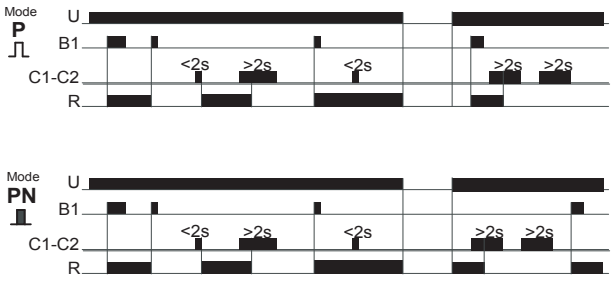

Connections

3-wire-circuit

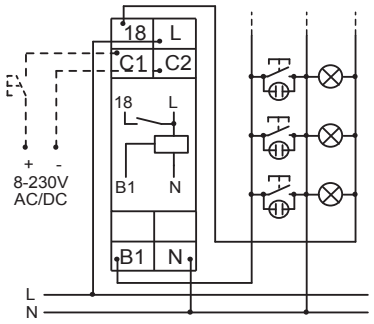

4-wire-circuit with attic illumination

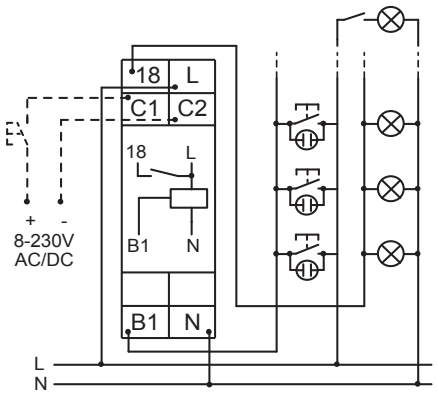

Dimensions

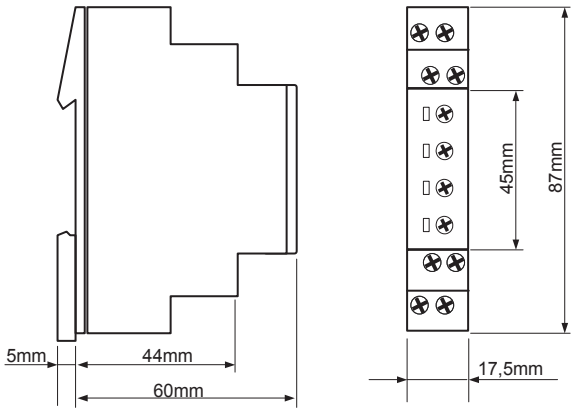

Ordering information

Types	Functions	Additional control input	Supply voltage	Part. No.
E1ZTP 230V AC	TW, 1, 0, P	no	230V a.c.	110301
E1ZTPNC 230V AC	T, TW, 1, 0, P, PN	C1-C2	230V a.c.	110300

RELEASE 2012/07

Subject to alterations and errors

tele
Technik Braucht Kontrolle