# DX2033

## Multifunction display for monitoring revolution, speed and time

DISPLAY/FX460/PNP OUT/DC

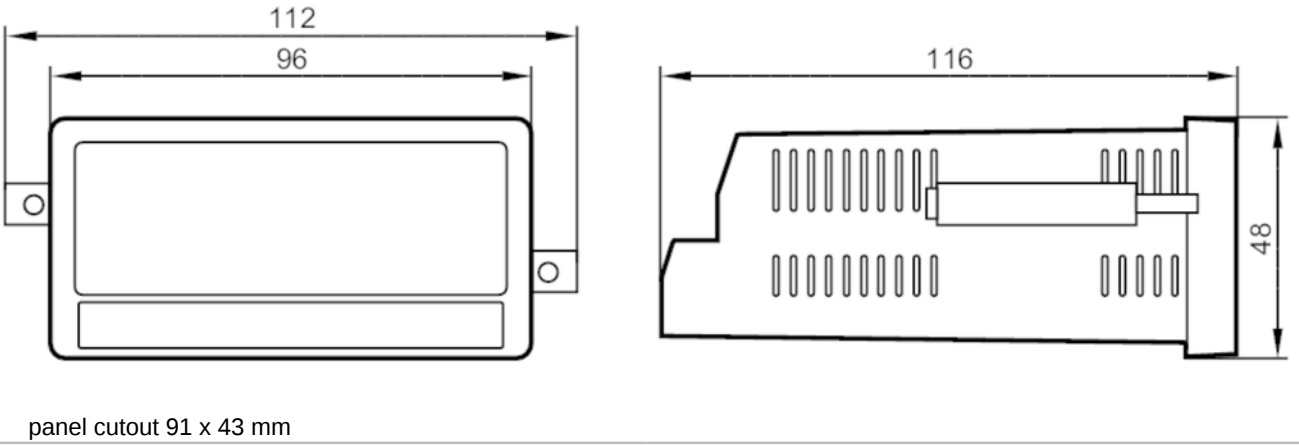


panel cutout 91 x 43 mm

| | | |
|---|---|---|
| **Product characteristics** | | |
| Housing | | housing for panel mounting |
| Dimensions | [mm] | 48 x 112 x 116 |
| **Application** | | |
| Application | | universal evaluation and display for all physical units which can be derived from pulse sequences |
| **Electrical data** | | |
| Operating voltage | [V] | 18...30 DC |
| Current consumption | [mA] | 100 |
| **Inputs / outputs** | | |
| Number of inputs and outputs | | Number of digital inputs: 2; Number of digital outputs: 4 |
| **Inputs** | | |
| Number of digital inputs | | 2 |
| **Outputs** | | |
| Number of digital outputs | | 4 |
| Overload protection | | yes |
| **Operating conditions** | | |
| Ambient temperature | [°C] | -20...60 |
| Storage temperature | [°C] | -25...70 |
| Protection | | IP 65 |
| Protection rating terminals | | IP 20 |
| **Tests / approvals** | | |
| EMC | | EN 61000-6-2 |
| | | EN 61000-6-3 |
| | | EN 61000-6-4 |
| **Mechanical data** | | |
| Weight | [g] | 299 |
| Housing | | housing for panel mounting |
| Type of mounting | | installation in panels or panel cutouts; (panel cutout: 91 x 43 mm) |

# DX2033

## Multifunction display for monitoring revolution, speed and time

DISPLAY/FX460/PNP OUT/DC

| | | | |
|---|---|---|---|
| Dimensions | [mm] | 48 x 112 x 116 | |
| Materials | | Noryl UL94-V-0 | |
| **Displays / operating elements** | | | |
| Display | | colour display | full graphic LCD display, touch screen |
| **Electrical connection** | | | |
| screw terminals: | | | |
| Connection | | | |

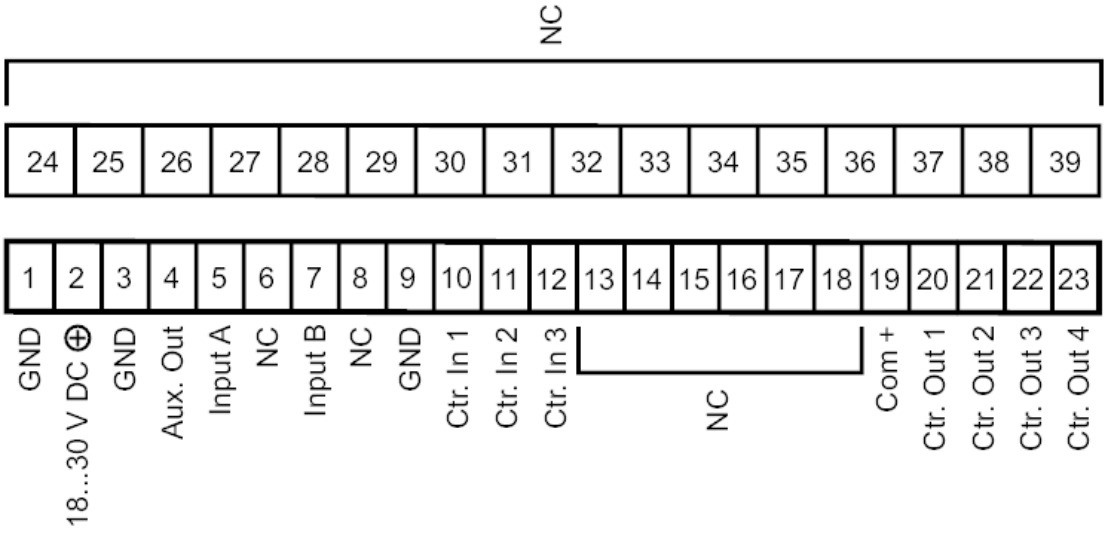


NC: not used