AC5271

AS-Interface Airbox with quick mounting technology

AirBox 5/3 closed 4DI-Y AUX

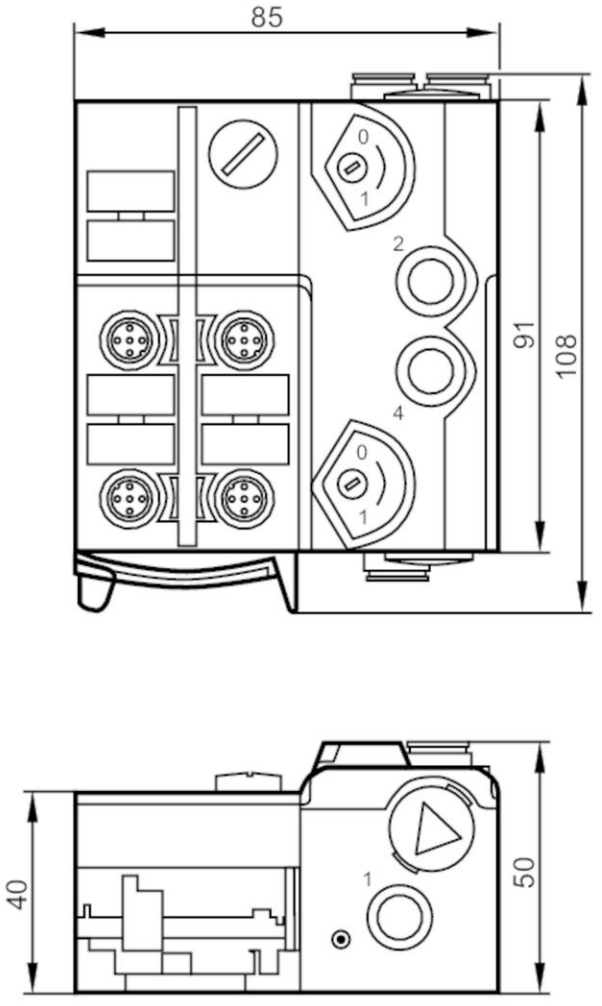

Application		
Application		field installation
Medium temperature	[°C]	-10...50
Electrical data		
Operating voltage	[V]	26.5...31.6 DC
Max. current consumption from AS-i	[mA]	280
Additional voltage supply	[V]	18...30 DC; (to PELV)
Additional voltage supply		required
Max. current consumption from additional supply	[mA]	10
Integrated watchdog		yes
Inputs / outputs		
Number of inputs and outputs		Number of digital inputs: 4; Number of pneumatic outputs: 2

AC5271

AS-Interface Airbox with quick mounting technology

AirBox 5/3 closed 4DI-Y AUX

Inputs						
Number of digital inputs		4				
Input circuit of digital inputs		PNP				
Sensor supply of the inputs		AS-i				
Power supply	[V]	20...30; (via flat cable)				
Max. total current rating of inputs	[mA]	200				
Input current High	[mA]	6...10				
Input current Low	[mA]	0...2				
Switching level high	[V]	> 11				
Digital inputs protected against short circuits		yes				
Outputs						
Number of pneumatic outputs		2; (supply: external 24 V power supply)				
Actuator supply outputs		AUX				
Operating conditions						
Ambient temperature	[°C]	-10...55				
Protection		IP 65; IP 67				
Tests / approvals						
EMC		EN 50295				
		IEC 61000-6-2				
MTTF	[years]	216				
AS-i classification						
AS-i version		2.11; 3.0				
AS-i addressing		addressing socket				
Extended addressing mode		yes				
AS-i profile		S-7.A.E				
AS-i I/O configuration	[hex]	7				
AS-i ID code	[hex]	A.E				
Assignment of the data bits		data bit	D0	D1	D2	D3
		input	1	2	3	4
		socket	I-1/2	I-1/2 I-2	I-3/4	I-3/4 I-4
		pin	4	2 4	4	2 4
		pneumatic output	2	4	-	-
Mechanical data						
Weight	[g]	384				
Type of mounting		quick mounting				
Materials		PA; POM; piercing contacts: CuSn6 nickel-plated and tin-plated				
Pneumatic system		1 x 5/3-way slide valve (free from overlapping); middle position blocked				
Operating pressure range	[bar]	3...8				
Operating pressure range	[MPa]	0.3...0.8				
Operating pressure range	[psi]	43.5...116				
Air flow at 6/5 bar	[l/min]	400				
Permissible compressed air		non-lubricated compressed air class 6-3-1; lubricated compressed air class 6-3-4				
Manual override		pressing/releasing or pressing/turning/locking				

AC5271

AS-Interface Airbox with quick mounting technology

AirBox 5/3 closed 4DI-Y AUX

Tube fittings	8 mm	
Exhaust	exhaust can be discharged through tube connection	
Displays / operating elements		
Display	operation	LED, green
	errors	LED, red
	function	LED, yellow
Electrical connection		
Module connection	Flat cables	
Accessories		
Items supplied	lower part	
Accessories (optional)	Mounting plate:, E74999	
	Module lower part:, E75000	
	Protective cap: M12, E73004	
	sealing plugs:, E75231	
	silencer:, E75232	
	Push-in L-fitting:, E75228	
	Push-in T-fitting:, E75227	
Remarks		
Remarks	If not pneumatically operated, E75231 sealing plug must be inserted.	
	Avoid ingress of dirt and dust.	
	Do not connect any of the following points to an external potential:	
	L-, L+, I-1, I-2, I-3, I-4	
	The connections are electrically connected with the AS-i cable.	
	Please see the notes on compressed air and EMC/ESD under "Downloads"	
Pack quantity	1 pcs.	

AC5271

AS-Interface Airbox with quick mounting technology

AirBox 5/3 closed 4DI-Y AUX

Electrical connection

quick mounting technology for AS-i flat cable: ; three orientations possible

Connection

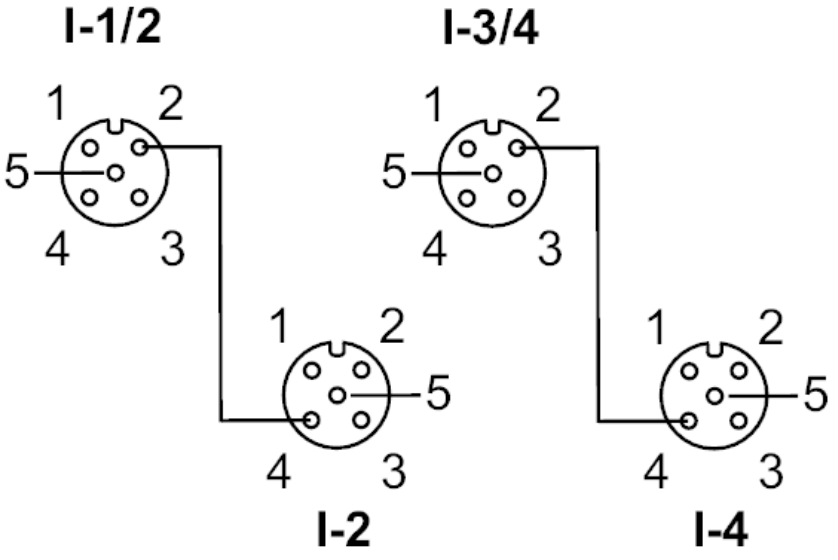

Connector: M12

	Inputs
	socket I-1/2
1	Sensor supply L+
2	data input 2
3	Sensor supply L-
4	data input 1
5	not used
	socket I-2
1	Sensor supply L+
2	not used
3	Sensor supply L-
4	data input 2
5	not used
	socket I-3/4
1	Sensor supply L+
2	data input 4
3	Sensor supply L-
4	data input 3
5	not used
	socket I-4
1	Sensor supply L+
2	not used
3	Sensor supply L-
4	data input 4
5	not used

AC5271

AS-Interface Airbox with quick mounting technology

AirBox 5/3 closed 4DI-Y AUX

Diagrams and graphs

Pneumatic symbol

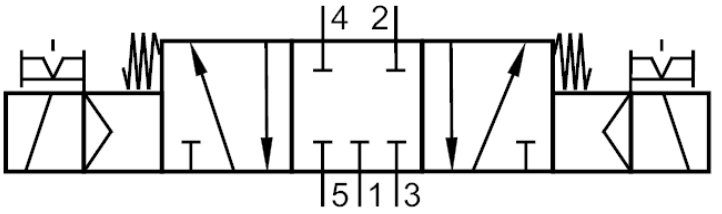

1 x 5/3-way slide valve (free from overlapping); middle position blocked