THE INFORMATION CONTAINED IN THIS DRAWING IS THE SOLE PROPERTY OF L-COM, INC. ANY REPRODUCTION IN PART OR WHOLE WITHOUT THE WRITTEN PERMISSION OF L-COM, INC. IS PROHIBITED.

REVISIONS			
REV	DESCRIPTION	DATE	APPROVED
E	ECN 7835: REVISED MODEL TO ABS DESIGN	3/10/15	D.FRISIELLO
F	ECN 8129: ADD OPERATING TEMPERATURE RANGE	10/16/15	S.LI

WIRING MAP	
"P1"	"J1"
1	1
2	2
3	3
4	4
5	5
6	6
7	7
8	8
9	9
SHELL	SHELL

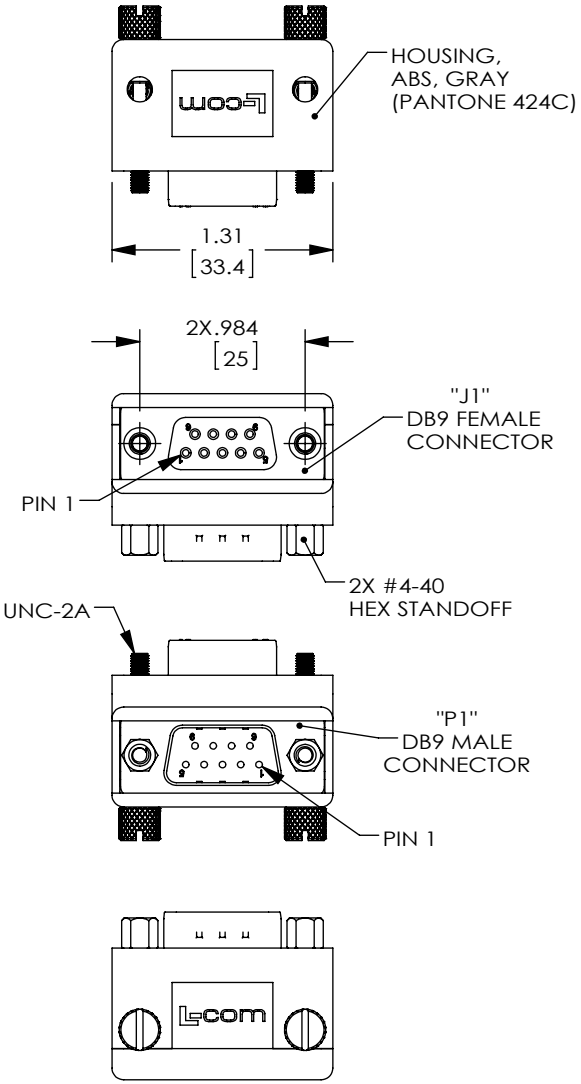

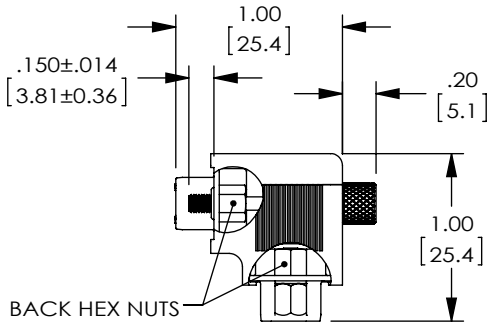

HARDWARE CONFIGURATIONS

STANDARD HARDWARE CONFIGURATION

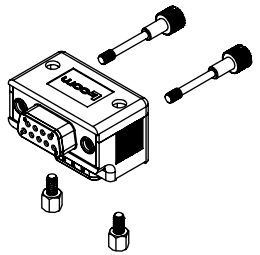

ALTERNATE HARDWARE CONFIGURATION

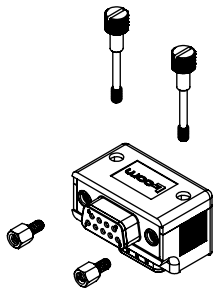

NOTES:

1. ADAPTER SHALL BE TESTED FOR CONTINUITY.
2. ADAPTER SHALL BE INDIVIDUALLY PACKAGED IN ACCORDANCE WITH L-COM SPECIFICATION PS-0031.
3. PRODUCT SHIPPED IN STANDARD HARDWARE CONFIGURATION SHOWN ABOVE AND IN EXPLODED VIEW.
4. OPERATING TEMPERATURE RANGE: -15˚C~+70˚C

REGULATORY COMPLIANCE:
CE2011/65/EU(RoHS DIRECTIVE)

UNLESS OTHERWISE SPECIFIED,
DIMENSIONS ARE IN INCHES [mm]
OVERALL CABLE LENGTH TOLERANCE:
≤12 [305] = +1 [25] / -0
>12 [305] ≤60 [1524] = +2 [51] / -0
>60 [1524] ≤120 [3048] = +4 [102] / -0
>120 [3048] ≤300 [7620] = +6 [152] / -0
>300 [7620] = +5% / -0%
ALL OTHER DIMENSIONAL TOLERANCES:
.X = ± .2 [5.08]
.XX = ± .02 [.51]
.XXX = ±.005 [.13]
PROJECTION

APPROVALS	DATE
DRAWN BY M.LAHEY	04/01/05
CHECKED BY C.McCORMICK	04/01/05
APPROVED BY D.PARHAM	04/01/05

CONFIGURATION DETAILS OF UNDIMENSIONED FEATURES MAY VARY

COLOR VARIATIONS MAY OCCUR

REF

L-COM Global Connectivity
45 BEECHWOOD DRIVE
NORTH ANDOVER, MA
01845

CATEGORY
D-SUBMINIATURE

PRODUCT DESCRIPTION
ADPT,DB9M/F RA ORIENTATION 2

SIZE	FSCM NO.	DWG. NO.	REV.
A	43321	DG909MF2	F

SCALE: NONE | CAD FILE: DG909MF2.SLDDRW | SHEET 1 OF 1