John Guest Product Data Sheet

22mm Polyethylene Equal Elbow Connector PEM0322W

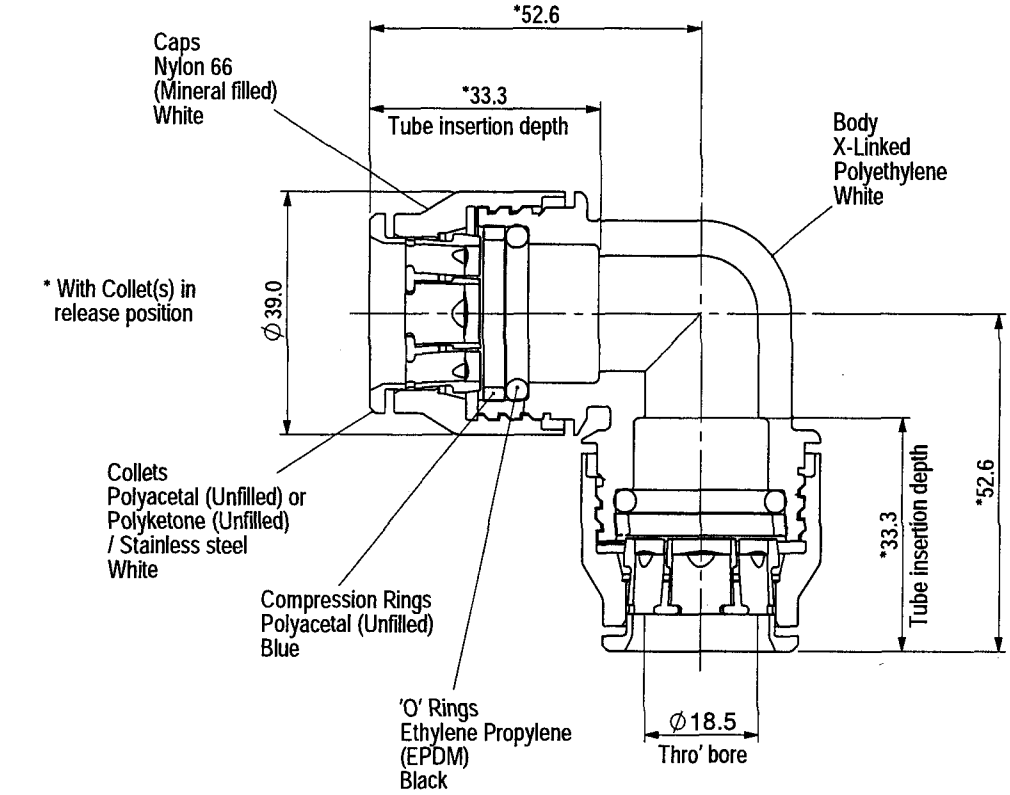

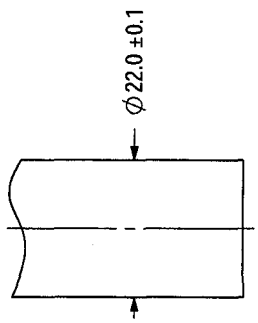

Tube Detail

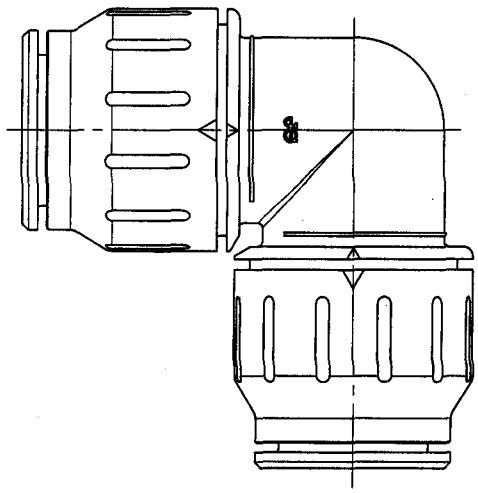

Dimensions in mm

THE COPYRIGHT IN THIS DRAWING AND THE PRODUCTS REFERRED THEREON BELONG TO JOHN GUEST INTERNATIONAL LIMITED AND THIS DRAWING NOR THE INFORMATION CONTAINED HEREIN SHALL BE PRODUCED IN ANY FORM OR USED FOR ANY PURPOSE WITHOUT WRITTEN CONSENT © 2002

The company has a policy of continuous research and development and reserves the right to amend without notice the specification and design of all products illustrated. For details of terms and conditions and any other technical enquiries, please contact our Customer Services Department.

ECN11955

DS-PEM0322W

(sht 1 of 1 sht)

ISSUE 2 18-01-02

020314-C-1400 MCL1