# Technical data sheet
# Throughbeam photoelectric sensor transmitter
Part no.: 50137171
LS3C/XX-M8



For Illustration purposes only

**Contents**


- Technical data
- Dimensioned drawings
- Electrical connection
- Diagrams
- Operation and display
- Suitable receivers
- Part number code
- Notes
- Further information
- Accessories

# Technical data

## Basic data

| | |
|---|---|
| **Series** | 3C |
| **Operating principle** | Throughbeam principle |
| **Device type** | Transmitter |

## Optical data

| | |
|---|---|
| **Operating range** | 0.05 ... 8.5 m |
| **Operating range** | Guaranteed operating range |
| **Operating range limit** | 0.05 ... 10 m |
| **Operating range limit** | Typical operating range |
| **Beam path** | Divergent |
| **Light source** | LED, Red |
| **Wavelength** | 632 nm |
| **Transmitted-signal shape** | Pulsed |
| **LED group** | Exempt group (in acc. with EN 62471) |
| **Light spot size [at sensor distance]** | 4 mm [100 mm] |
| **Type of light spot geometry** | Round |

## Electrical data

| | |
|---|---|
| **Protective circuit** | Polarity reversal protection |
| | Short circuit protected |

### Performance data

| | |
|---|---|
| **Supply voltage $U_B$** | 10 ... 30 V, DC, Incl. residual ripple |
| **Residual ripple** | 0 ... 15 %, From $U_B$ |
| **Open-circuit current** | 0 ... 20 mA |

### Inputs

#### Activation inputs

| | |
|---|---|
| **Switching voltage** | high: ≥8V |
| | low: ≤ 2 V |

## Time behavior

| | |
|---|---|
| **Readiness delay** | 300 ms |

## Connection

### Connection 1

| | |
|---|---|
| **Function** | Voltage supply |
| **Type of connection** | Connector |
| **Thread size** | M8 |
| **Type** | Male |
| **Material** | Metal |
| **No. of pins** | 4 -pin |

## Mechanical data

| | |
|---|---|
| **Dimension (W x H x L)** | 11.4 mm x 34.2 mm x 18.3 mm |
| **Housing material** | Plastic |
| **Plastic housing** | PC-ABS |
| **Lens cover material** | Plastic / PMMA |
| **Net weight** | 10 g |
| **Housing color** | Red |
| **Type of fastening** | Through-hole mounting |
| | Via optional mounting device |
| **Compatibility of materials** | ECOLAB |

## Operation and display

| | |
|---|---|
| **Type of display** | LED |
| **Number of LEDs** | 2 Piece(s) |

## Environmental data

| | |
|---|---|
| **Ambient temperature, operation** | -40 ... 60 °C |
| **Ambient temperature, storage** | -40 ... 70 °C |

## Certifications

| | |
|---|---|
| **Degree of protection** | IP 67 |
| | IP 69K |
| **Protection class** | III |
| **Approvals** | c UL US |
| **Standards applied** | IEC 60947-5-2 |

## Classification

| | |
|---|---|
| **Customs tariff number** | 85365019 |
| **ECLASS 5.1.4** | 27270901 |
| **ECLASS 8.0** | 27270901 |
| **ECLASS 9.0** | 27270901 |
| **ECLASS 10.0** | 27270901 |
| **ECLASS 11.0** | 27270901 |
| **ECLASS 12.0** | 27270901 |
| **ECLASS 13.0** | 27270901 |
| **ECLASS 14.0** | 27270901 |
| **ECLASS 15.0** | 27270901 |
| **ETIM 5.0** | EC002716 |
| **ETIM 6.0** | EC002716 |
| **ETIM 7.0** | EC002716 |
| **ETIM 8.0** | EC002716 |
| **ETIM 9.0** | EC002716 |
| **ETIM 10.0** | EC002716 |

# Dimensioned drawings

All dimensions in millimeters

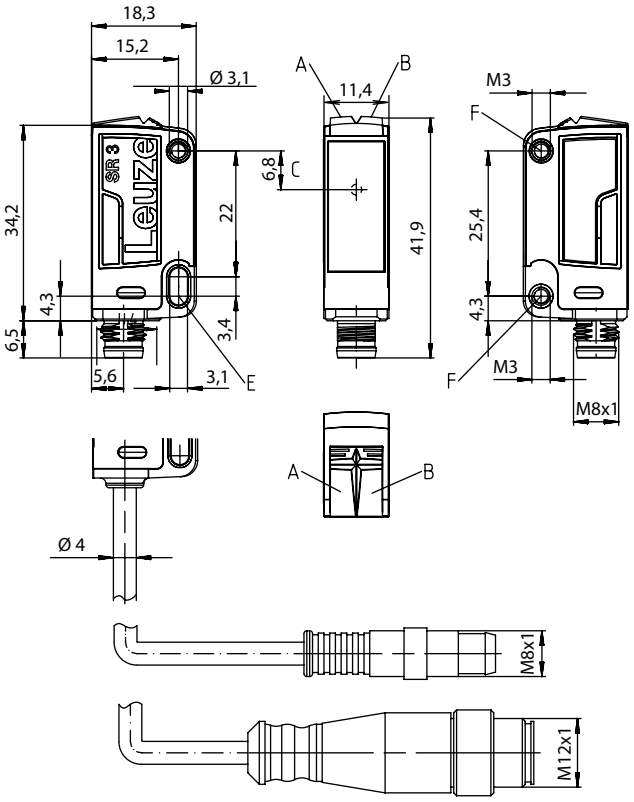


A Green LED
B Yellow LED
C Optical axis
E Mounting sleeve (standard)
F Threaded sleeve (3C.B series)

# Electrical connection

## Connection 1

| | |
|---|---|
| **Function** | Voltage supply |
| **Type of connection** | Connector |
| **Thread size** | M8 |
| **Type** | Male |
| **Material** | Metal |
| **No. of pins** | 4 -pin |

| Pin | Pin assignment |
|---|---|
| **1** | V+ |
| **2** | n.c. |
| **3** | GND |
| **4** | n.c. |

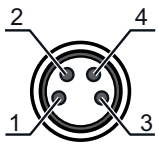

# Diagrams

## Typ. response behavior

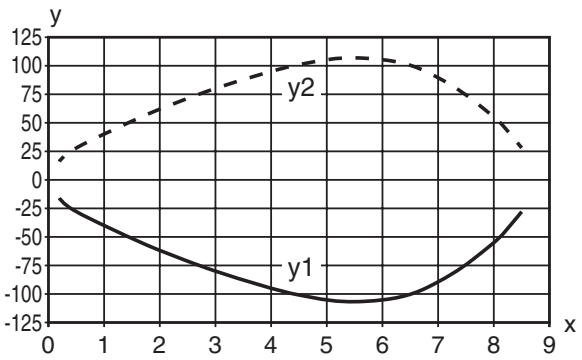


x Distance [m]
y Misalignment [mm]

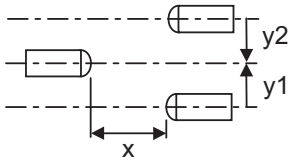


# Operation and display

| LED | Display | Meaning |
|---|---|---|
| 1 | Green, continuous light | Operational readiness |
| 2 | Yellow, continuous light | Transmitted beam active |

# Suitable receivers

| | Part no. | Designation | Article | Description |
|---|---|---|---|---|
|  | 50137182 | LE3C.1/6G-M8 | Throughbeam photoelectric sensor receiver | Operating range limit: 0.05 ... 10 m<br>Supply voltage: DC<br>Digital switching outputs: 2 Piece(s)<br>Switching output 1: Transistor, Push-pull, Light switching (PNP)/dark switching (NPN)<br>Switching output 2: Transistor, Push-pull, Dark switching (PNP)/light switching (NPN)<br>Switching frequency: 1,000 Hz<br>Connection: Connector, M8, Metal, 4 -pin<br>Operational controls: 270° potentiometer |
|  | 50137189 | LE3C/4W-M8 | Throughbeam photoelectric sensor receiver | Special version: Warning output<br>Operating range limit: 0.05 ... 10 m<br>Supply voltage: DC<br>Digital switching outputs: 2 Piece(s)<br>Switching output 1: Transistor, PNP, Light switching<br>Switching output 2: Transistor, PNP, UB switching<br>Switching frequency: 1,000 Hz<br>Connection: Connector, M8, Metal, 4 -pin |
|  | 50137180 | LE3C/6G-M8 | Throughbeam photoelectric sensor receiver | Operating range limit: 0.05 ... 10 m<br>Supply voltage: DC<br>Digital switching outputs: 2 Piece(s)<br>Switching output 1: Transistor, Push-pull, Light switching (PNP)/dark switching (NPN)<br>Switching output 2: Transistor, Push-pull, Dark switching (PNP)/light switching (NPN)<br>Switching frequency: 1,000 Hz<br>Connection: Connector, M8, Metal, 4 -pin |

# Suitable receivers

| | Part no. | Designation | Article | Description |
|---|---|---|---|---|
|  | 50137192 | LE3C/LP-M8 | Throughbeam photoelectric sensor receiver | Operating range limit: 0.05 ... 10 m<br>Supply voltage: DC<br>Digital switching outputs: 2 Piece(s)<br>Switching output 1: Transistor, Push-pull, IO-Link / light switching (PNP)/dark switching (NPN)<br>Switching output 2: Transistor, PNP, Dark switching<br>Switching frequency: 1,000 Hz<br>Interface: IO-Link<br>Connection: Connector, M8, Metal, 4 -pin |

# Part number code

Part designation: **AAA 3C d EE-f.GG H/i J-K**

| | |
|---|---|
| **AAA3C** | **Operating principle / construction**<br>HT3C: Diffuse reflection sensor with background suppression<br>LS3C: Throughbeam photoelectric sensor transmitter<br>LE3C: Throughbeam photoelectric sensor receiver<br>PRK3C: Retro-reflective photoelectric sensor with polarization filter<br>ODT3C: Distance diffuse sensor with background suppression |
| **d** | **Light type**<br>n/a: red light<br>I: infrared light |
| **EE** | **Light source**<br>n/a: LED<br>L1: laser class 1<br>L2: laser class 2<br>PP: Power PinPoint LED |
| **f** | **Preset range (optional)**<br>n/a: operating range acc. to data sheet<br>xxxF: Preset range [mm]<br>2M: operating range of 2 meters |
| **GG** | **Equipment**<br>n/a: standard<br>A: Autocollimation principle (single lens) for positioning tasks<br>B: Housing model with two M3 threaded sleeves, brass<br>F: Permanently set range<br>L: Long light spot<br>S: small light spot<br>T: autocollimation principle (single lens) for highly transparent bottles without tracking<br>TT: autocollimation principle (single lens) for highly transparent bottles with tracking<br>V: V-optics<br>XL: Extra long light spot<br>X: extended model<br>HF: Suppression of HF illumination (LED) |
| **H** | **Operating range adjustment**<br>n/a with HT: range adjustable via 8-turn potentiometer<br>n/a with retro-reflective photoelectric sensors (PRK): operating range not adjustable<br>1: 270° potentiometer<br>3: teach-in via button<br>6: auto-teach |
| **i** | **Switching output/function OUT 1/IN: Pin 4 or black conductor**<br>2: NPN transistor output, light switching<br>N: NPN transistor output, dark switching<br>4: PNP transistor output, light switching<br>P: PNP transistor output, dark switching<br>6: push-pull switching output, PNP light switching, NPN dark switching<br>G: Push-pull switching output, PNP dark switching, NPN light switching<br>L: IO-Link interface (SIO mode: PNP light switching, NPN dark switching)<br>8: activation input (activation with high signal)<br>X: pin not used<br>1: IO-Link / light switching (NPN) / dark switching (PNP) |

# Part number code

| | |
|---|---|
| **J** | **Switching output / function OUT 2/IN: pin 2 or white conductor**<br>2: NPN transistor output, light switching<br>N: NPN transistor output, dark switching<br>4: PNP transistor output, light switching<br>P: PNP transistor output, dark switching<br>6: push-pull switching output, PNP light switching, NPN dark switching<br>G: Push-pull switching output, PNP dark switching, NPN light switching<br>W: warning output<br>X: pin not used<br>8: activation input (activation with high signal)<br>9: deactivation input (deactivation with high signal)<br>T: teach-in via cable |
| **K** | **Electrical connection**<br>n/a: cable, standard length 2000 mm, 4-wire<br>5000: cable, standard length 5000 mm, 4-wire<br>M8: M8 connector, 4-pin (plug)<br>M8.3: M8 connector, 3-pin (plug)<br>200-M8: cable, length 200 mm with M8 connector, 4-pin, axial (plug)<br>200-M8.3: cable, length 200 mm with M8 connector, 3-pin, axial (plug)<br>200-M12: cable, length 200 mm with M12 connector, 4-pin, axial (plug) |

**Note**

- A list with all available device types can be found on the Leuze website at www.leuze.com.

# Notes

**Observe intended use!**

- This product is not a safety sensor and is not intended as personnel protection.
- The product may only be put into operation by competent persons.
- Only use the product in accordance with its intended use.

**For UL applications:**

- For UL applications, use is only permitted in Class 2 circuits in accordance with the NEC (National Electric Code).
- These proximity switches shall be used with UL Listed Cable assemblies rated 30V, 0.5A min, in the field installation, or equivalent (categories: CYJV/CYJV7 or PVVA/PVVA7)

# Further information

- Light source: Average life expectancy 100,000 h at an ambient temperature of 25 °C

# Accessories

## Connection technology - Connection cables

| | Part no. | Designation | Article | Description |
|---|---|---|---|---|
|  | 50130850 | KD U-M8-4A-V1-050 | Connection cable | Connection 1: Connector, M8, Axial, Female, 4 -pin<br>Connector, LED: No<br>Connection 2: Open end<br>Shielded: No<br>Cable length: 5.000 mm<br>Sheathing material: PVC |
|  | 50130871 | KD U-M8-4W-V1-050 | Connection cable | Connection 1: Connector, M8, Angled, Female, 4 -pin<br>Connector, LED: No<br>Connection 2: Open end<br>Shielded: No<br>Cable length: 5.000 mm<br>Sheathing material: PVC |

## Mounting technology - Mounting brackets

| | Part no. | Designation | Article | Description |
|---|---|---|---|---|
|  | 50060511 | BT 3 | Mounting device | Design of mounting device: Angle, L-shape<br>Fastening, at system: Through-hole mounting<br>Mounting bracket, at device: Screw type<br>Type of mounting device: Rigid<br>Material: Metal |

## Mounting technology - Rod mounts

| | Part no. | Designation | Article | Description |
|---|---|---|---|---|
|  | 50117829 | BTP 200M-D12 | Mounting system | Design of mounting device: Protection hood<br>Fastening, at system: For 12 mm rod<br>Mounting bracket, at device: Screw type<br>Type of mounting device: Clampable, Adjustable, Turning, 360°<br>Material: Metal |
|  | 50117255 | BTU 200M-D12 | Mounting system | Design of mounting device: Mounting system<br>Fastening, at system: For 12 mm rod, Sheet-metal mounting<br>Mounting bracket, at device: Screw type, Suited for M3 screws<br>Type of mounting device: Clampable, Adjustable, Turning, 360°<br>Material: Metal |

**Note**

↳ A list with all available accessories can be found on the Leuze website in the Download tab of the article detailed page.