View product details on medias

26.12.2024, 06:07:23 UTC

SCHAEFFLER



FAG

32305-A

Tapered roller bearing

Tapered roller bearings 323, main dimensions to DIN ISO 355 / DIN 720, separable, adjusted or in pairs

Technical information

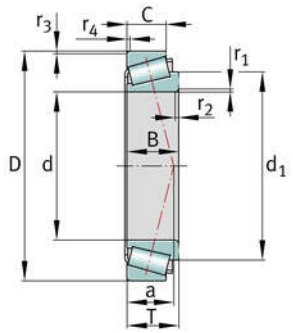

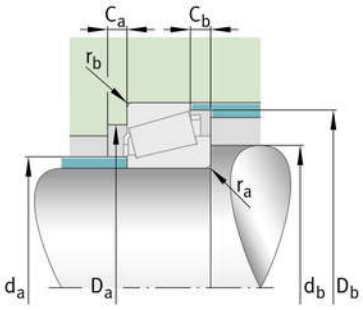

Your current product variant

Tolerance class	PN	Normal (ISO 492:2014)
Heat treatment	Standard	
Cage	Standard	Sheet steel cage, window cage, roller-guided
Internal design	Standard	
Quality level	Standard	
Number of rolling element rows	1	Single-row design

Main Dimensions & Performance Data

d	25 mm	Bore diameter
D	62 mm	Outside diameter
B	24 mm	Width, inner ring
C	20 mm	Width, outer ring
T	25.25 mm	Width, total
C_r	62,000 N	Basic dynamic load rating, radial
C_{0r}	66,000 N	Basic static load rating, radial
C_{ur}	7,900 N	Fatigue load limit, radial
n_G	12,500 1/min	Limiting speed
$n_{\vartheta r}$	7,800 1/min	Thermal speed rating
≈m	369.93 g	Weight

The datasheet is only an overview of dimensions and basic load ratings of the selected product. Please always observe all further information and guidelines for this product.For further information you can use the contact form on our website

Mounting dimensions

$d_{a\ max}$	33 mm	Maximum diameter of shaft shoulder
$d_{b\ min}$	32 mm	Minimum diameter of shaft shoulder
$D_{a\ min}$	53 mm	Minimum diameter of housing shoulder
$D_{a\ max}$	55 mm	Maximum diameter of housing shoulder
$D_{b\ min}$	57 mm	Minimum diameter of housing shoulder
$C_{a\ min}$	3 mm	Minimum axial space
$C_{b\ min}$	5 mm	Minimum axial space
$r_{a\ max}$	1.5 mm	Maximum fillet radius of shaft
$r_{b\ max}$	1.5 mm	Maximum fillet radius of housing

Dimensions

$r_{1,\ 2\ min}$	1.5 mm	Minimum chamfer dimension of inner ring back face
$r_{3,\ 4\ min}$	1.5 mm	Minimum chamfer dimension of outer ring back face
a	16 mm	Distance between the apexes of the pressure cones
d_1	42.3 mm	Guidance rib diameter of inner ring

Temperature range

T_{min}	-30 °C	Operating temperature min.
T_{max}	120 °C	Operating temperature max.

Calculation factors

e	0.3	Limiting value of Fa/Fr for the applicability of diff. Values of factors X and Y
Y	2	Dynamic axial load factor
Y_0	1.1	Static axial load factor

Additional information

	T2FD025	Comparative designation to ISO 10317 and ISO 355

The datasheet is only an overview of dimensions and basic load ratings of the selected product. Please always observe all further information and guidelines for this product.For further information you can use the contact form on our website

Characteristics



Radial load



Axial load in one direction


Grease Lubrication


Oil Lubrication


Not sealed

The datasheet is only an overview of dimensions and basic load ratings of the selected product. Please always observe all further information and guidelines for this product.For further information you can use the contact form on our website