

Model Number

OMH-RL31-02

Mounting bracket narrow

Features

- Mounting bracket
- Simple and fast mounting

Dimensions

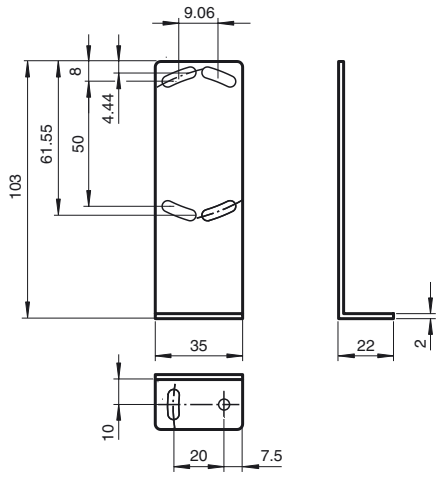

Technical data

Mechanical specifications	
Material	Metal sheet (steel), zinc-plated
Suitable series	
Series	Series 31

Release date: 2012-03-27 17:10 Date of issue: 2012-03-27 189793_eng.xml

Subject to modifications without notice
Copyright Pepperl+Fuchs

Pepperl+Fuchs Group www.pepperl-fuchs.com
USA: +1 330 486 0001 fa-info@us.pepperl-fuchs.com
Germany: +49 621 776-4411 fa-info@pepperl-fuchs.com
Singapore: +65 6779 9091 fa-info@sg.pepperl-fuchs.com