TECHNICAL DATA

DesignMax DM3C
in-ceiling loudspeaker

PROFESSIONAL

Product Overview

With coaxial two-way drivers, the 30-watt DesignMax DM3C loudspeaker offers clear, intelligible highs and surprising low end for its size — along with premium aesthetics that complement any commercial sound installation. The DM3C features a two-way 3.5-inch woofer and .75-inch coaxial tweeter mounted within the Dispersion Alignment system, delivering a frequency range of 75 Hz – 20 kHz. The DM3C is ceiling-mounted, installed easily via QuickHold mounting arms.



Key Features

Combine DesignMax models to complete any design, big or small — 12 loudspeakers to mix and match, from 2-inch, low-profile models to 8-inch, high-SPL compression-driver loudspeakers and outdoor-rated options.

Deliver clear highs and surprising low-end for their size with coaxial two-way drivers — no DSP or EQ required. For even better sound, combine with select Bose DSPs and amplifiers to enable Bose loudspeaker EQ and SmartBass processing, which expands performance and response at any listening level.

Ensure a consistent listening experience throughout the room with the Dispersion Alignment system, which matches the coverage of the woofer to the pattern of the tweeter.

Blend with any room design with elegant form factors, minimum-bezel grilles available in black or white, and removable logos.

Reduce installation time with the patented QuickHold mounting system, which also reduces strain, hassle, and the chance of product damage.

Install easily with industry-standard accessories — all models include Euroblock connectors; in-ceiling models include plenum-rated backcans, tile bridges, and front-access audio wiring that makes installation and troubleshooting easier.

Technical Specifications

SINGLE LOUDSPEAKER PERFORMANCE		
Frequency Response (–3 dB) [1]	85 – 19,000 Hz	
Frequency Range (–10 dB) [1]	75 – 20,000 Hz	
Nominal Coverage Angle (1 – 4 kHz)	135° Conical	
Nominal Coverage Angle (1 – 10 kHz)	135° Conical	
	AES component test [4]	**Bose extended-lifecycle test [5]**
Power Handling, long-term continuous	30 W	25 W
Power Handling, peak	120 W	100 W
Sensitivity (SPL/ 1W @ 1 m) [2]	83 dB	83 dB
Calculated Maximum SPL @ 1 m [3]	98 dB	97 dB
Calculated Maximum SPL @ 1 m, peak	104 dB	103 dB
Crossover	1.7 kHz (passive 2-way crossover)	
Loudspeaker EQ	Not Required, Bose EQ voicing and SmartBass processing available	
Recommended High-Pass Protection	80 Hz with recommended 24 dB / octave filter	
Transformer taps	70V: 3, 6, 12, 25 W, bypass 100V: 6, 12, 25 W, bypass	
TRANSDUCERS		
Low Frequency	1 x 3.25-inch woofer (83 mm)	
High Frequency	20 mm (1 x 0.75-inch) neodymium dome tweeter, coaxially mounted	
Technology	Dispersion Alignment system, 127 mm (5 in) system diameter	
Nominal Impedance	8 ohms (transformer bypass)	

DesignMax DM3C
in-ceiling loudspeaker

PHYSICAL	
Enclosure Material	Engineered-plastics front baffle with integrated steel formed back can
Grille	Magnetically attached perforated steel, powder-coated finish, paintable, with safety-tether
Logo	Rotatable, removable
Color	Black: RAL 9005, White: Bose Arctic White, similar to RAL 9003, Paintable
Environmental	Indoor only
Safety Agency	UL-1480A, S5591/ UL Listed, in compliance with UL2043 for plenum-space installation, NFPA70 & NFPA90-A, CE compliant
Operating Temperature Range	0 °C to 50 °C (32 °F to 122 °F)
Connectors	Euroblock 6-pin connector with loop-through, front-baffle mounted. Accepts 18 AWG (0.8 mm^2) to 14 AWG (2.5 mm^2) size wire
Wire/Conduit Entry	Top and side wire entry point knockouts, allows for 9.5 mm (3/8 in) conduit
Suspension / Mounting	Three (3) QuickHold, spring-loaded mounting arms plus three (3) safety cable tabs
Maximum Ceiling Thickness	39 mm (1.5 in)
Product Dimensions (Grille Diameter × Depth)	255 × 154 mm (10.0 × 6.0 in)
Backcan Dimensions (Diameter × Depth)	203 × 144 mm (8.0 × 5.7 in)
Cut Out Size	208 mm (8.2 in)
Net Weight, Loudspeaker with grille (single)	2.68 kg (5.9 lb)
Net Weight, Tile-Bridge (single)	0.8 kg (1.7 lb)
Shipping Weight (pair)	8.7 kg (19.2 lb)
Included Accessories	Adjustable Tile-Bridge, Template
Optional Accessories	Rough-in 6-pack
PRODUCT CODES	
829708-0110	DESIGNMAX DM3C PAIR BLK
829708-0210	DESIGNMAX DM3C PAIR WHT

Footnotes
(1) Frequency response and range measured on-axis in half-space environment with Bose EQ voicing
(2) Sensitivity measured on-axis in half-space environment averaged 100 Hz – 10 kHz using recommended High-Pass protection
(3) Maximum SPL calculated from sensitivity and power handling specifications, exclusive of power compression.
(4) AES standard 2-hour duration with IEC system noise
(5) Bose extended-lifecycle test using pink noise filtered to meet IEC268-5, 6-dB crest factor, 500-hour duration.
(6) Measured in whole-space environment

For additional specifications and application information, please visit PRO.BOSE.COM.
Specifications subject to change without notice. 09/2020

DesignMax DM3C
in-ceiling loudspeaker

On-Axis Frequency Response

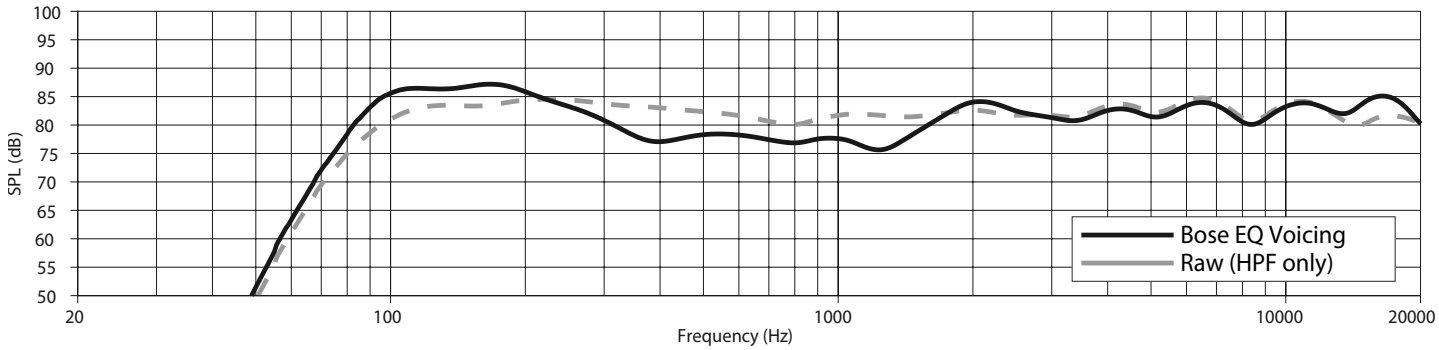

Impedance

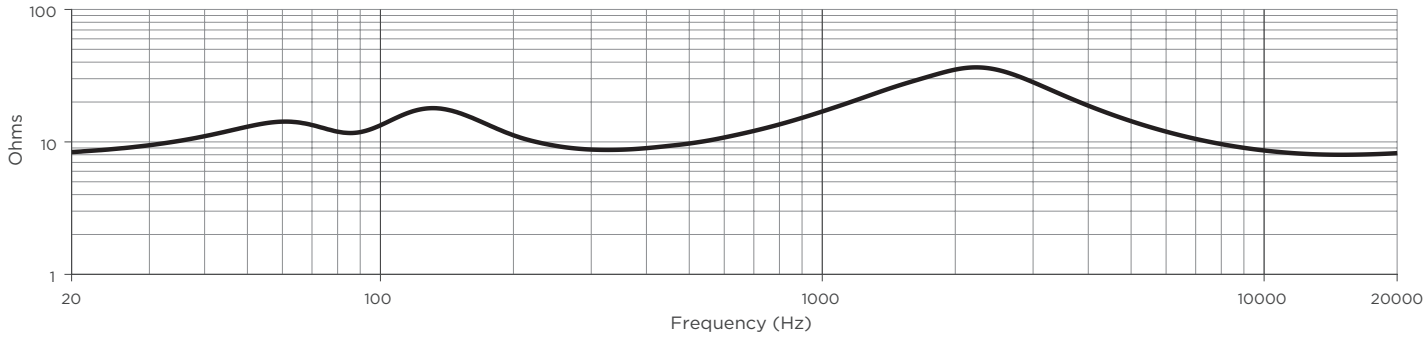

Beamwidth [6]

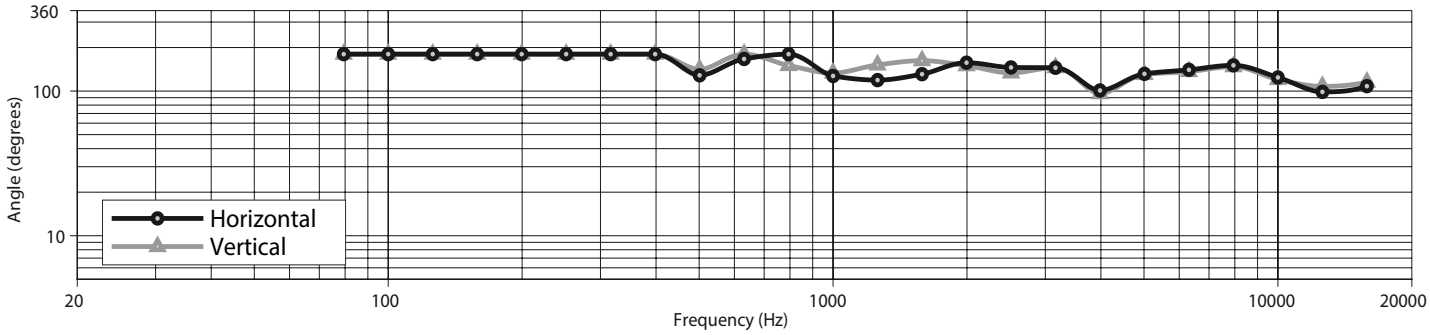

For additional specifications and application information, please visit PRO.BOSE.COM.
Specifications subject to change without notice. 09/2020

DesignMax DM3C
in-ceiling loudspeaker

Dimensions

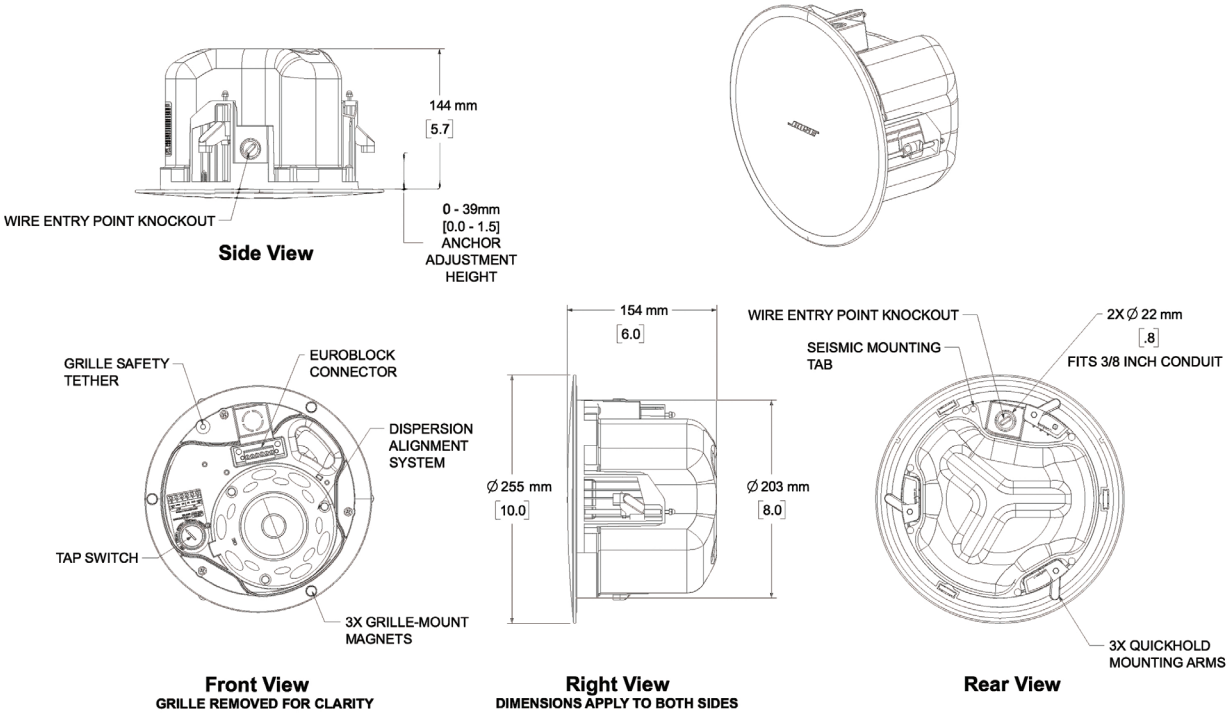

NOTES:
1. DIMENSIONS ARE IN MILLIMETERS OVER INCHES
2. WEIGHT 2.68kg [5.9lbs]

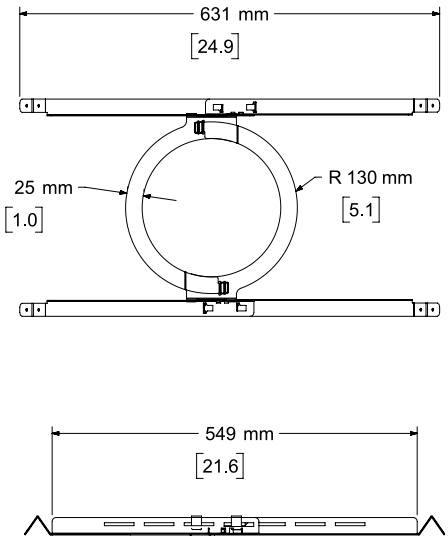

For additional specifications and application information, please visit PRO.BOSE.COM.
Specifications subject to change without notice. 09/2020