JUMO GmbH & Co. KG

Delivery address: Mackenrodtstraße 14,
36039 Fulda, Germany
Postal address: 36035 Fulda, Germany
Phone: +49 661 6003-0
Fax: +49 661 6003-607
e-mail: mail@jumo.net
Internet: www.jumo.net

JUMO Instrument Co. Ltd.

JUMO House
Temple Bank, Riverway
Harlow, Essex CM20 2DY, UK
Phone: +44 1279 635533
Fax: +44 1279 635262
e-mail: sales@jumo.co.uk
Internet: www.jumo.co.uk

JUMO PROCESS CONTROL INC.

885 Fox Chase, Suite 103
Coatesville PA 19320, USA
Phone: 610-380-8002
1-800-554-JUMO
Fax: 610-380-8009
e-mail: info@JumoUSA.com
Internet: www.JumoUSA.com

JUMO dTRANS T04
Four-wire Transmitter, settable via DIP switch/PC setup program

for connection to Pt100/Pt1000 resistance thermometer or potentiometer; rail-mounted to EN 60715



dTRANS T04
Type 707040/...

Brief description

These transmitters are designed for industrial applications and are used to measure the temperature or resistance through a Pt100 or Pt1000 resistance sensor or potentiometer in 2-wire or 3-wire circuit connection.
The 0 — 20 mA, 4 — 20 mA or 0 — 10 V output signal is available linear with temperature/resistance. The continuous analog signal path enables a fast reaction of the output to a temperature change (analog continuous measurement instead of digital sampling rate). This results in a low-noise output signal that is immune to interference. High precision, even with small ranges, is ensured by the range-specific gain adjustment.
The transmitter can be set either on the instrument itself, via DIP switch, or through the PC setup program.



Block structure

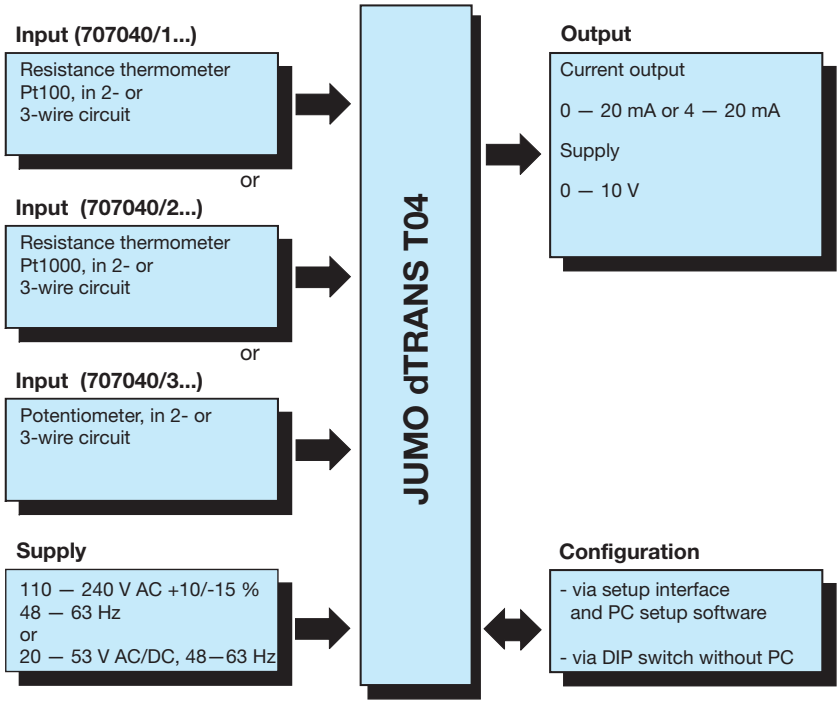

Controls

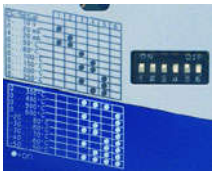	The chosen measuring range and output response can be set via DIP switch. Using the PC setup program, additional ranges and parameters are configurable.

Key features

- Measuring range selectable via DIP switch or through the PC setup program
- Choice of signal output: 0 — 10V, 0 — 20mA or 4 — 20mA
- Fast response, thanks to continuous analog measurement
- Low-noise current signal, immune to interference
- Electrical isolation between input, output / mains supply
- Current/voltage output

Technical data

Input

Measurement input	Pt100 EN 60751	Pt1000 EN 60751	Potentiometer
Range limits	-200 to +850°C	-200 to +850°C	0 — 11000Ω
Connection circuit	2- and 3-wire circuit		
Configuration	through DIP switch or using the PC setup program		
Shortest span	25°C	25°C	250Ω
Largest span	1050°C	1050°C	11000Ω
Range start for shortest span	-50°C to +20°C	-50°C to +20°C	0 — 500Ω
Range start for other spans	see range organization on Page 5 and Page 6		
Unit	°C (°F settable through the PC setup program)	°C (°F settable through the PC setup program)	Ω
Sensor lead resistance for 3-wire connection	≤ 11Ω per conductor		
Sensor lead resistance for 2-wire connection	factory-set: 0Ω lead resistance, adjustable through the PC setup program		
Sensor current	≤ 0.5mA	≤ 0.1mA	≤ 0.1mA
Sampling rate	continuous measurement (analog signal path)		

Output

Measurement input	Pt100 EN 60751	Pt1000 EN 60751	Potentiometer
Output signal - current: - voltage:	selectable through DIP switch or PC setup program proportional DC current 0 — 20mA or 4 — 20mA DC voltage 0 — 10V		
Transfer characteristic - for resistance thermometer: - for potentiometer:	linear with temperature linear with resistance		
Transfer accuracy	≤ ± 0.1%[1]		
Residual ripple	≤ ± 0.2%[1]		
Burden (with current output)	≤ 750Ω		
Burden error	≤ ± 0.01% / 100Ω[1]		
Current limiting	> 21.6mA — < 28mA (24mA typical)		
Load (with voltage output)	≥ 10kΩ		
Load error	≤ ± 0.1%[1]		
Voltage limiting	> 11V — < 14V (12V typical)		
Settling time on a temperature change	≤ 40msec		
Settling time after switch-on or reset	≤ 200msec		
Calibration conditions	230V AC or 24V DC (depending on the supply) at 23°C (± 5°C)		
Calibration accuracy	≤ ± 0.3%[1,2] or ≤ ± 0.3°C[2]	≤ ± 0.3%[1,2] or ≤ ± 0.3°C[2]	≤ ± 0.3%[1]
Supply voltage error	≤ ± 0.05%[1]		

[1] All data refer to the range end value 10V or 20mA
[2] The larger value applies

Measuring circuit monitoring

Underrange: - current output 4 — 20mA - current output 0 — 20mA - voltage output 0 — 10V	 falling to ≤ 3.6mA < 0mA (-0.05mA typical) < 0V -0.6V typical)
Overrange - current output 4 — 20mA - current output 0 — 20mA - voltage output 0 — 10V	 rising to > 21.6mA — < 28mA (24mA typical) rising to > 21.6mA — < 28mA (24mA typical) rising to > 11V — < 14V (12V typical)
Probe short-circuit: - current output 4 — 20mA - current output 0 — 20mA - voltage output 0 — 10V	 ≥ 1.5mA — ≤ 3.6mA (2mA typical) < 0mA (-0.05mA typical) < 0V (-0.6V typical)

Probe and lead break:	Signal is configurable.
- current output 4 — 20mA	positive signal: > 21.6mA — < 28mA (24mA typical) negative signal: ≥ 1.5mA — ≤ 3.6mA (2mA typical)
- current output 0 — 20mA	positive signal: > 21.6mA — < 28mA (24mA typical) negative signal: < 0mA (-0.05mA typical)
- voltage output 0 — 10V	positive signal: > 11V — < 14V (12V typical) negative signal: < 0V (-0.6V typical)

Electrical data

Supply voltage	110 — 240V AC +10/-15%, 48 — 63Hz	20 — 53V AC/DC, 48 — 63Hz
Power consumption	4VA	3VA
Electrical safety	to EN 61010, Part 1 overvoltage category III, pollution degree 2, for switching cabinet mounting to EN 50178	to EN 61010, Part 1 protection class III, for operation with SELV/PELV circuits
Test voltage	3700V	500V
Electrical isolation	The supply is electrically isolated from the input and the output. There is no electrical isolation between input, output and setup connector.	The supply is electrically isolated from the input and the output. There is no electrical isolation between input, output and setup connector.

Environmental influences

Operating temperature range	-25 to +55°C
Storage temperature range	-40 to +90°C
Storage temperature humidity	rel. humidity ≤ 85%, no condensation
Temperature error	≤ ± 0.01% / °C[1]
Climatic conditions	EN 60721-3-3 3K3 rel. humidity ≤ 85% annual average, no condensation
Vibration strength	according to GL Characteristic 2
EMC - interference emission - immunity to interference	EN 61326 Class B to industrial requirements
IP enclosure protection	IP20 to EN 60529

[1] All data refer to the range end value 10V or 20mA

Housing

Material	polycarbonate
Flammability class	UL 94 V0
Dimensions (W x H x D)	22.5 x 93.5 x 60mm
Screw terminal	2,5mm² wire cross-section / 2.5mm wire dia.
Mounting	on 35mm x 7.5mm DIN rail to EN 60715 A.1, for installation in control cabinets
Operating position	unrestricted
Weight	approx. 100g

PC setup program

The PC setup program is used for configuration and fine adjustment of the transmitter from a PC (e.g. when the sensor drifts). Connection is through the PC interface with TTL/RS232 converter and adapter and the setup interface of the transmitter. In order to configure the transmitter, it must be connected to the supply.

Configurable parameters

- TAG number (14 characters)
- response to probe and cable break
- range start, range end
- output signal 0(4) — 20mA or 0 — 10V
- lead resistance for 2-wire circuit

Fine adjustment

Fine adjustment means correction of the output signal of a configured transmitter; systematic errors such as those caused by an unsuitable probe mounting can be compensated. The signal can be adjusted in the range ±0.2mA for current output and ±0.1V for voltage output. Fine adjustment can only be carried out through the setup program.

Hardware and software requirements

The following hardware and software requirements must be met for installing and operating the PC setup program:

- IBM-PC or compatible PC with Pentium processor or higher
- 64 MB main memory
- 15MB available on hard disk
- CD-ROM drive
- 1 free serial interface
- Win 98, ME or Win NT4.0, 2000, XP

DIP switch configuration

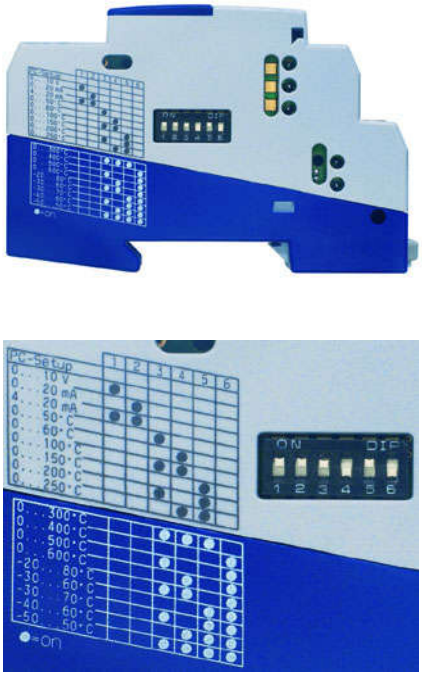

Function or measuring range for Pt100 and Pt1000	Function or measuring range for potentiometer	DIP switch					
		1	2	3	4	5	6
PC setup[1]	PC setup[1]						
Output 0 — 10V	Output 0 — 10V	●					
Output 0 — 20mA	Output 0 — 20mA		●				
Output 4 — 20mA	Output 4 — 20mA	●	●				
Range 0 to 50°C	Range 0 — 500Ω			●			
Range 0 to 60°C	Range 0 — 1kΩ				●		
Range 0 to 100°C	Range 0 — 2kΩ			●	●		
Range 0 to 150°C	Range 0 — 3kΩ					●	
Range 0 to 200°C	Range 0 — 4kΩ			●		●	
Range 0 to 250°C	Range 0 — 5kΩ				●	●	
Range 0 to 300°C	Range 0 — 6kΩ			●	●	●	
Range 0 to 400°C	Range 0 — 7kΩ						●
Range 0 to 500°C	Range 0 — 8kΩ			●			●
Range 0 to 600°C	Range 0 — 9kΩ				●		●
Range -20 to +80°C	Range 0 — 10kΩ			●	●		●
Range -30 to +60°C	Range 0 — 11kΩ					●	●
Range -30 to +70°C				●		●	●
Range -40 to +60°C					●	●	●
Range -50 to +50°C				●	●	●	●

● = on

[1] When configuring through the PC setup program, the input **and** output must be configured from the PC.

Measuring range organization (resistance thermometer)

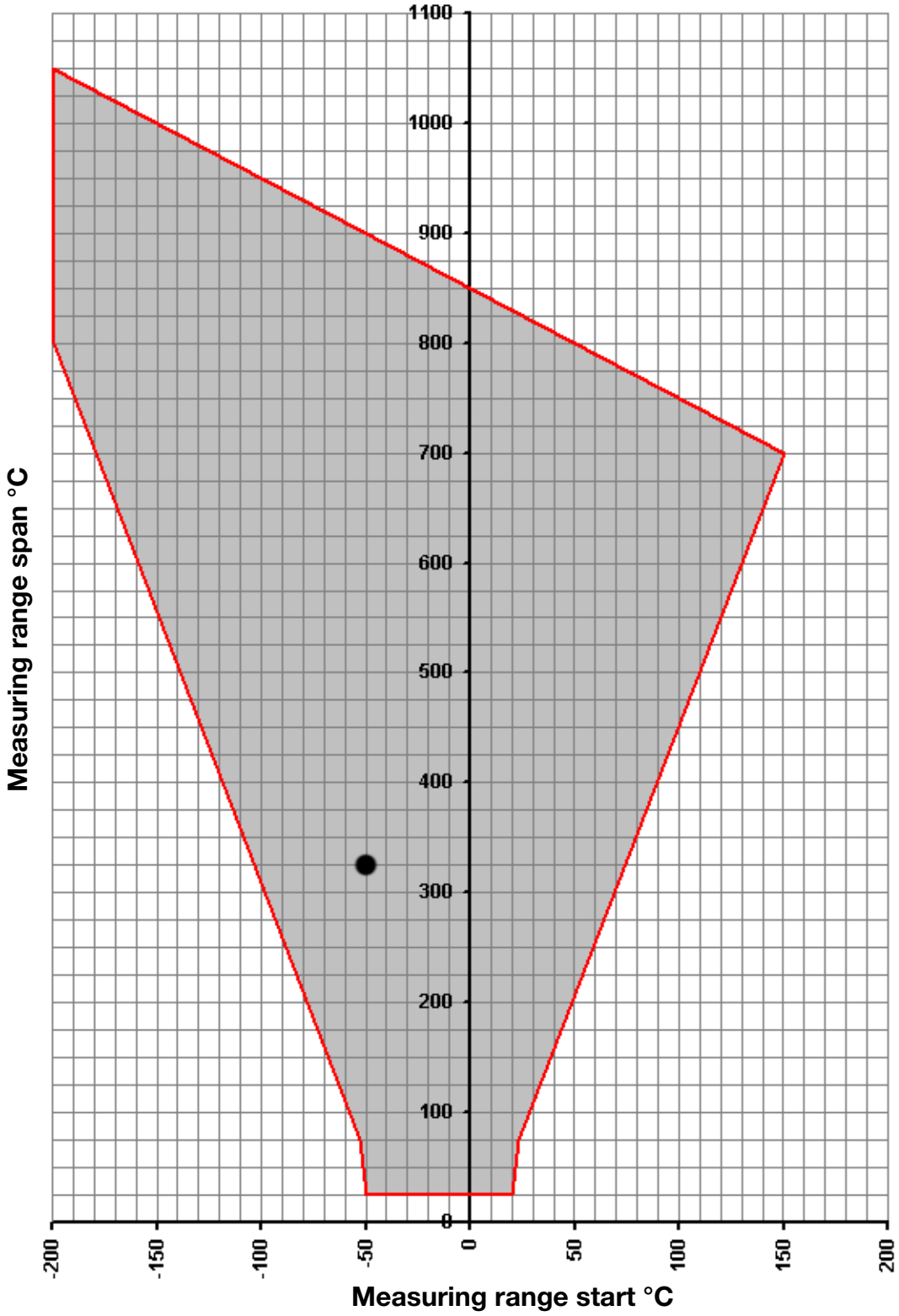

All the possible range-start values in relation to the range span are contained within the gray area.

range span = range end – range start

Example: range start = -50 °C, range end = 275 °C
range span = range end – range start = 275 °C - (-50 °C) = 325 °C

Please note: When selecting the range start, make sure it lies within the gray area.

Measuring range organization (potentiometer)

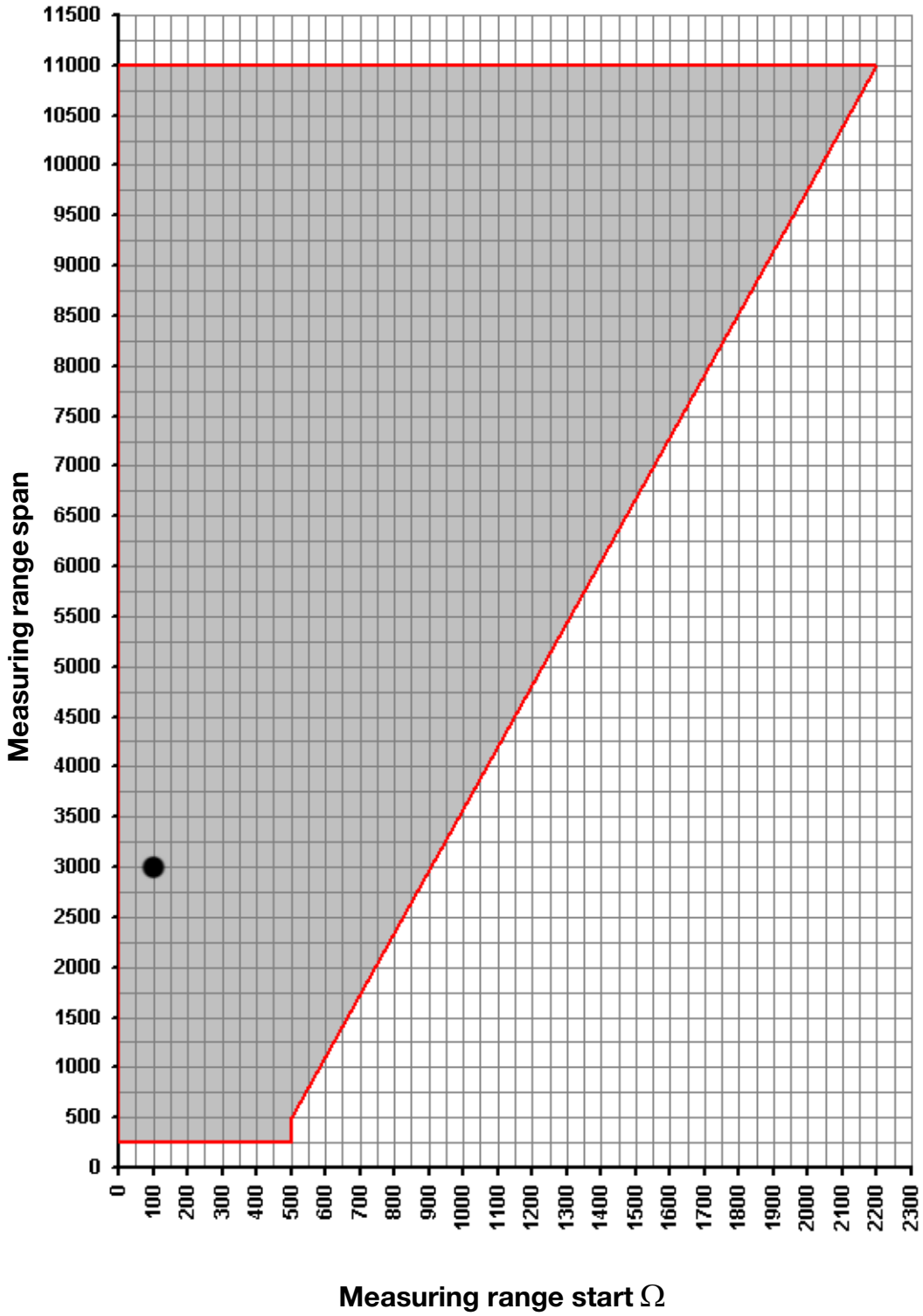

All the possible range-start values in relation to the range span are contained within the gray area.

range span = range end – range start

Example: range start = 100Ω, range end = 3100Ω
range span = range end – range start = 3100Ω – 100Ω = 3000Ω

Please note: When selecting the range start, make sure it lies within the gray area.

Connection diagram

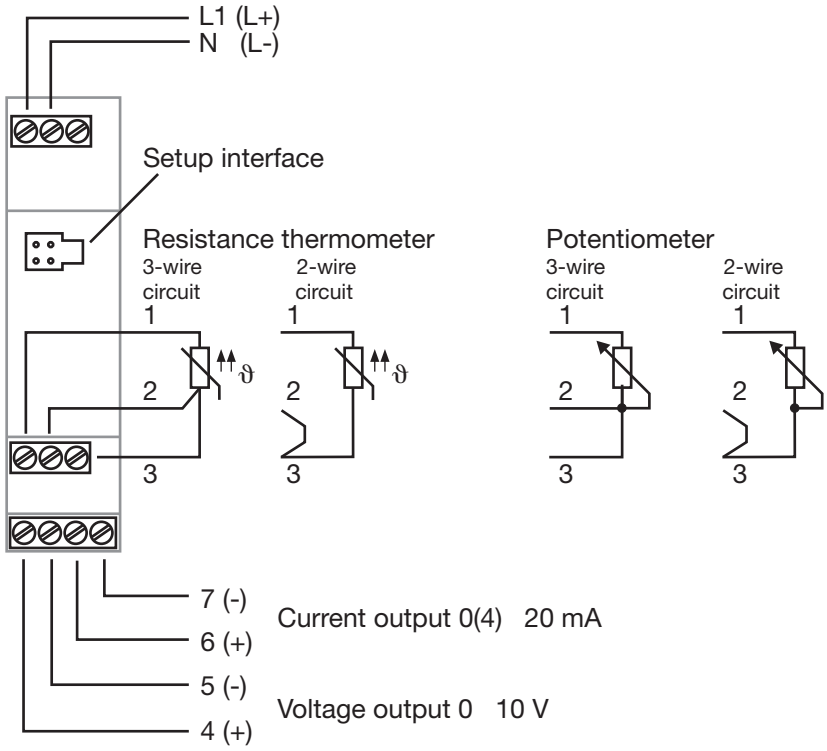

Dimensions

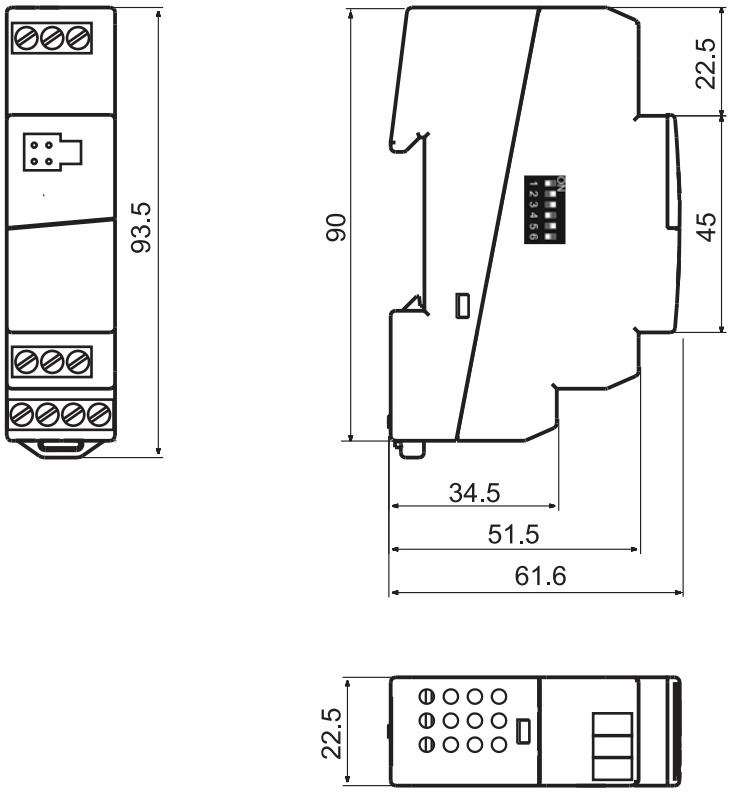

Order details: JUMO dTRANS T04

Four-wire transmitter, settable via DIP switch/PC setup program

				(1)	**Basic version**[1]
			707040/1		dTRANS T04 for Pt100 resistance thermometer
			707040/2		dTRANS T04 for Pt1000 resistance thermometer
			707040/3		dTRANS T04 for potentiometer
				(2)	**Input**
x	x		888		factory-set[2] (3-wire circuit, 0 to 100 °C)
		x	888		factory-set[2] (3-wire circuit, 0 — 1 kΩ)
x	x	x	999		configuration to customer specification (please specify in plain text)[3]
				(3)	**Output**
x	x	x	888		factory-set (0 — 20 mA)
x	x	x	999		setting to customer specification (please specify in plain text)[3]
				(4)	**Supply**
x	x	x	22		20 — 53 V AC/DC, 48 — 63 Hz
x	x	x	23		110 — 240 V AC +10/-15 %, 48 — 63 Hz

	(1)		(2)		(3)		(4)
Order code		-		-		-	
Order example	707040/1	-	888	-	888	-	23

[1] It is not possible to switch between the sensor types.
[2] Additional measuring ranges are selectable via DIP switch or PC setup program (see Page 4).
[3] Please check whether the required measuring range and output can be set via DIP switch. In such a case, “factory-set” can be ordered.

Standard accessory

- Operating Manual

Accessories - Data Sheet 70.9700

	Sales No.
- PC setup program, multilingual	70/00448774
- PC interface with TTL/RS232 converter and adapter (socket)	70/00350260
- PC interface with USB/TTL converter, adapter (socket) and adapter (pins)	70/00456352