E37211

Thermowell for temperature sensors

THERMOWELL, D6/ 1/2 NPT/L=100

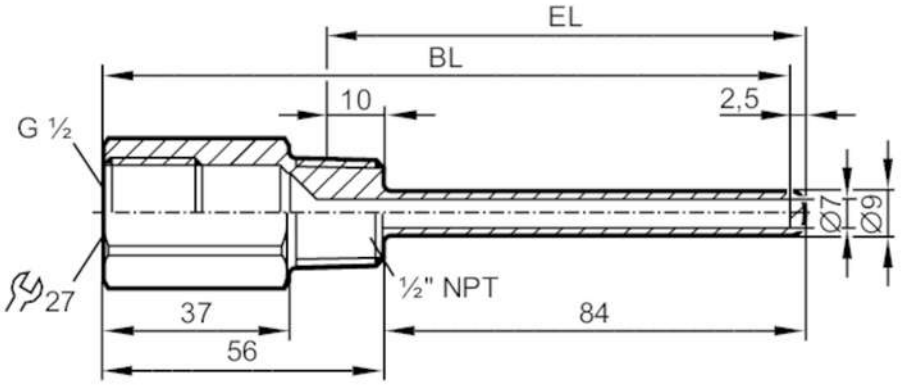

Application		
Design		for temperature sensors EL = 100 mm
Pressure rating	[bar]	16
Mechanical data		
Weight	[g]	164.6
Materials		stainless steel (1.4404 / 316L)
Sensor connection		G 1/2 sealing cone Ø 6 mm
Process connection		1/2" NPT
Installation length EL	[mm]	94
Bore length BL	[mm]	137
Remarks		
Pack quantity		1 pcs.