

Image may differ from product. See technical specification for details.

TU 508 M

Take-up cast iron housing for insert bearing, ISO

Take-up cast iron housings are non-split housings made of grey cast iron and are designed to provide a high degree of stiffness and accommodate heavy loads acting in different directions. These types of loads are typically encountered in conveyors, roller beds and crushers.

- Stiff housing
- Accommodate heavy radial loads in all directions
- Narrow width

Overview

Dimensions

Spherical seating diameter	80 mm
Housing overall width	49 mm

Properties

Housing type	Take-up
Material, housing	Cast iron
Coating	Without
Relubrication hole	With
Grease fitting	With

Logistics

Product net weight	1.71 kg
eClass code	23-05-08-02
UNSPSC code	31171536

Technical specification

Material	Cast iron

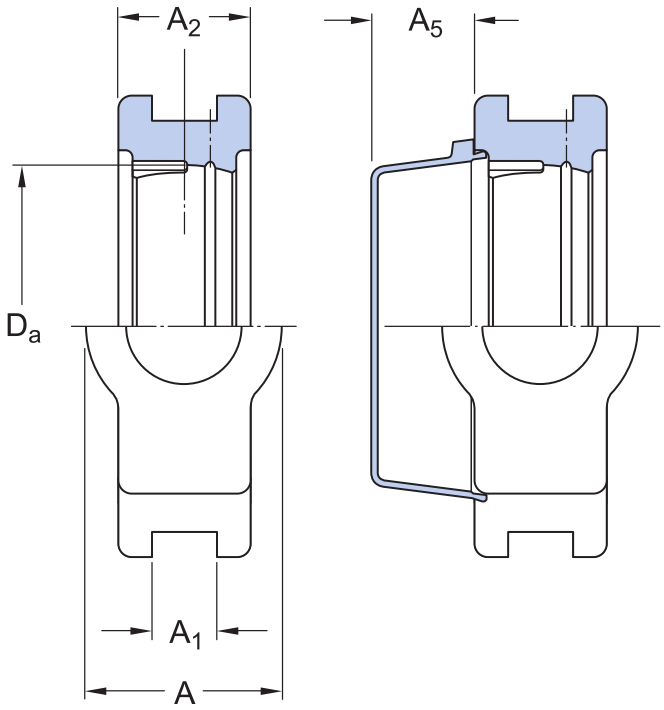

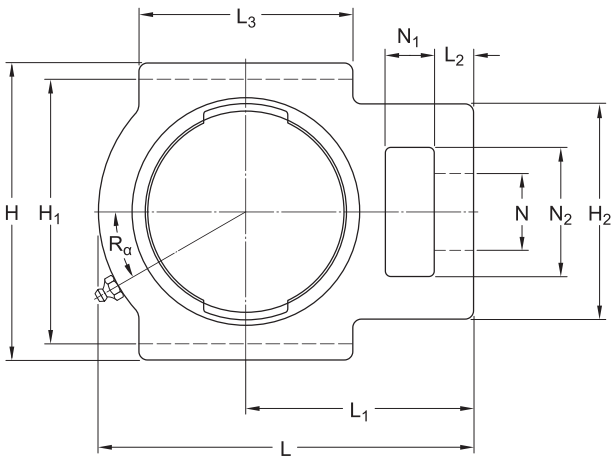

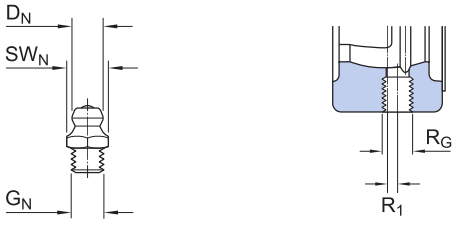

Dimensions

D_a	80 mm	Diameter of spherical seat
A	49 mm	Overall width
A_1	17.5 mm	Width of location slot
A_2	33 mm	Width of flange in which location slot is provided
A_5	24 mm	Standout of end cover
H	115 mm	Overall height
H_1	101 mm	Distance between bottoms of location slot
H_2	83 mm	Height of attachment end
L	145 mm	Overall length
L_1	88 mm	Distance from attachment end face to centre line of spherical seat diameter
L_2	15 mm	Length attachment end
L_3	83 mm	Length of locations slot
N	29 mm	Diameter of attachment bolt hole
N_1	19 mm	Length of attachment slot
N_2	50 mm	Height of attachment slot

GREASE FITTING

D_N	6.5 mm	Diameter of head sphere of grease fitting
SW_N	7 mm	Hexagonal key size for the grease fitting
G_N	1/4-28 SAE-LT	Thread of the grease fitting

THREADED HOLE

R_G	1/4-28 UNF	Housing thread for the grease fitting
R_1	4 mm	Axial position of the housing thread
R_α	30 °	Angular position of the housing thread

Associated products

End cover	ECY 208

Tolerances and clearances

The values depend on the included bearing:

- Bore diameter tolerance → table 1
- Radial internal clearance → table 2
- Recommended fit → table 3
- Shaft tolerance → table 4

Compatible products

Recommended product

End cover for bearing units	ECY 208

More Information

Product details

- Take-up units to ISO standards
- Take-up units to North American standards
- Take-up units to Japanese Industrial Standards (JIS)
- Take-up units, not standardized (SKF Food Line)
- Permissible misalignment
- Locating/non-locating support
- Loads
- Temperature limits
- Permissible speed
- Lubrication
- Mounting and dismounting
- Ordering information
- Designation system

Engineering information

- Principles of ball bearing units selection and application - Download catalogue (4.9 MB)
- Principles of selecting mounted bearing solutions
- Bearing failure and how to prevent it

Tools

- SKF Product select
- Bearing Frequency Calculator

Terms of use

By accessing and using this website / app owned and published by AB SKF (publ.) (556007-3495 · Gothenburg) (“SKF”), you agree to the following terms and conditions:

Warranty Disclaimer and Limitation of Liability

Although every care has been taken to assure the accuracy of the information on this website / app, SKF provides this information "AS IS" and DISCLAIMS ALL WARRANTIES, EXPRESS OR IMPLIED, INCLUDING, BUT NOT LIMITED TO, IMPLIED WARRANTIES OF MERCHANTABILITY AND FITNESS FOR A PARTICULAR PURPOSE. You acknowledge that your use of this website / app is at your sole risk, that you assume full responsibility for all costs associated with use of this website / app, and that SKF shall not be liable for any direct, incidental, consequential, or indirect damages of any kind arising out of your access to, or use of the information or software made available on this website / app.

Any warranties and representations in this website / app for SKF products or services that you purchase or use will be subject to the agreed upon terms and conditions in the contract for such product or service.

Further, for non-SKF websites / apps that are referenced in our website / app or where a hyperlink appears, SKF makes no warranties concerning the accuracy or reliability of the information in these websites / apps and assumes no responsibility for material created or published by third parties contained therein. In addition, SKF does not warrant that this website / app or these other linked websites / apps are free from viruses or other harmful elements.

Third Party Services

When viewing YouTube content via the SKF website(s) (i.e. using YouTube API Services), you agree to be bound by the YouTube Terms of Service.

Copyright

Copyright in this website / app copyright of the information and software made available on this website / app rest with SKF or its licensors. All rights are reserved. All licensed material will reference the licensor that has granted SKF the right to use the material. The information and software made available on this website / app may not be reproduced, duplicated, copied, transferred, distributed, stored, modified, downloaded or otherwise exploited for any commercial use without the prior written approval of SKF. However, it may be reproduced, stored and downloaded for use by individuals without prior written approval of SKF. Under no circumstances may this information or software be supplied to third parties.

This website /app includes certain images used under license from Shutterstock, Inc.

Trademarks and Patents

All trademarks, brand names, and corporate logos displayed on the website / app are the property of SKF or its licensors, and may not be used in any way without prior written approval by SKF. All licensed trademarks published on this website / app reference the licensor that has granted SKF the right to use the trademark. Access to this website / app does not grant to the user any license under any patents owned by or licensed to SKF.

Changes

SKF reserves the right to make changes or additions to this website / app at any time.