OJ5144

Diffuse reflection sensor with background suppression

OJH-FPKG/FO/AS

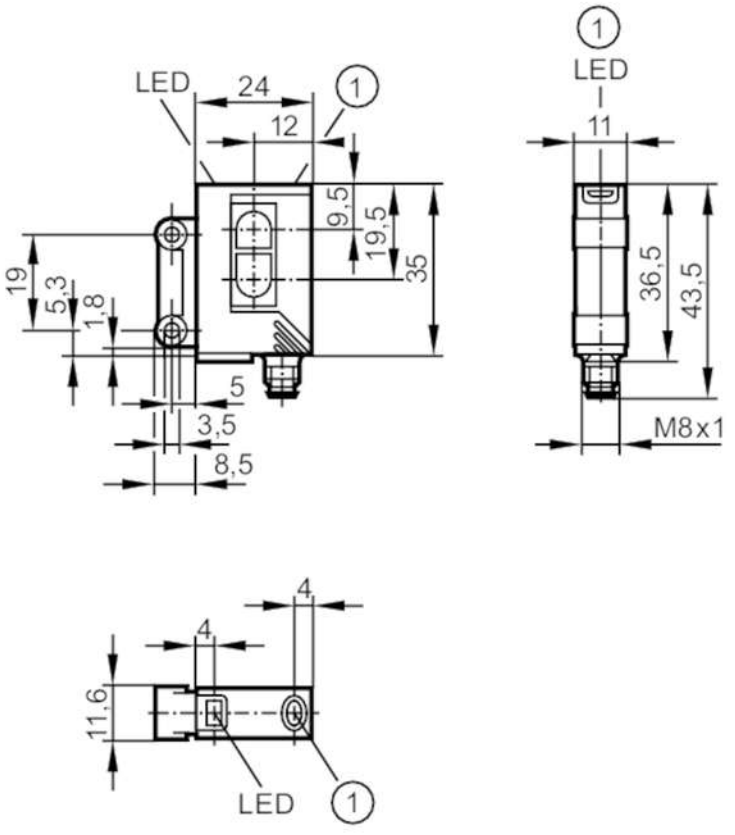

1 pushbutton
receiver in upper lens
transmitter in lower lens

Product characteristics		
Type of light		red light
Housing		rectangular
Application		
Special feature		Background suppression
Function principle		Diffuse reflection sensor
Electrical data		
Operating voltage	[V]	10...30 DC
Current consumption	[mA]	25
Protection class		III
Reverse polarity protection		yes
Type of light		red light
Wave length	[nm]	660
Outputs		
Electrical design		PNP
Output function		light-on/dark-on mode; (programmable)

OJ5144

Diffuse reflection sensor with background suppression

OJH-FPKG/FO/AS

Max. voltage drop switching output DC	[V]	2.5	
Permanent current rating of switching output DC	[mA]	200	
Switching frequency DC	[Hz]	1000	
Short-circuit protection		yes	
Type of short-circuit protection		pulsed	
Overload protection		yes	
Detection zone			
Range	[mm]	15...400; (white paper 200 x 200 mm 90% remission)	
Range adjustable		yes	
Max. light spot diameter	[mm]	18	
Light spot dimensions refer to		Range	
Background suppression available		yes	
Operating conditions			
Ambient temperature	[°C]	-25...60	
Protection		IP 67	
Tests / approvals			
EMC		EN 60947-5-2	
MTTF	[years]	556	
Mechanical data			
Weight	[g]	35.3	
Housing		rectangular	
Dimensions	[mm]	35 x 24 x 11	
Materials		housing: ABS; LED window: SEPS; pushbutton: SEPS	
Lens material		PMMA	
Lens alignment		front lens	
Displays / operating elements			
Display		switching status	1 x LED, yellow
		operation	1 x LED, green
Electronic lock		yes	
Accessories			
Items supplied		screws: 2	
		spring washers: 2	
		Nuts: 2	
Remarks			
Remarks		operating voltage "supply class 2" according to cULus	
Pack quantity		1 pcs.	

OJ5144

Diffuse reflection sensor with background suppression

OJH-FPKG/FO/AS

Electrical connection

Connector: 1 x M8; coding: A



Connection

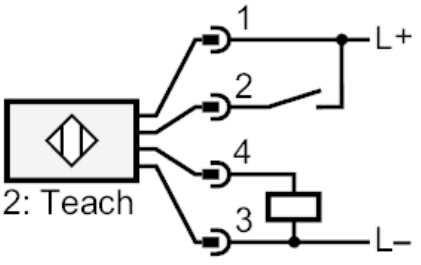

2	Teach

Diagrams and graphs

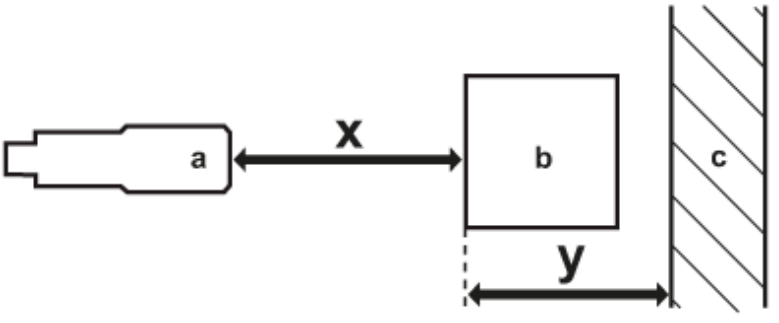

a: sensor
b: object
c: background
x: distance sensor/object [mm]
y: min. distance object/background [mm]

OJ5144

Diffuse reflection sensor with background suppression

OJH-FPKG/FO/AS

accuracy graph

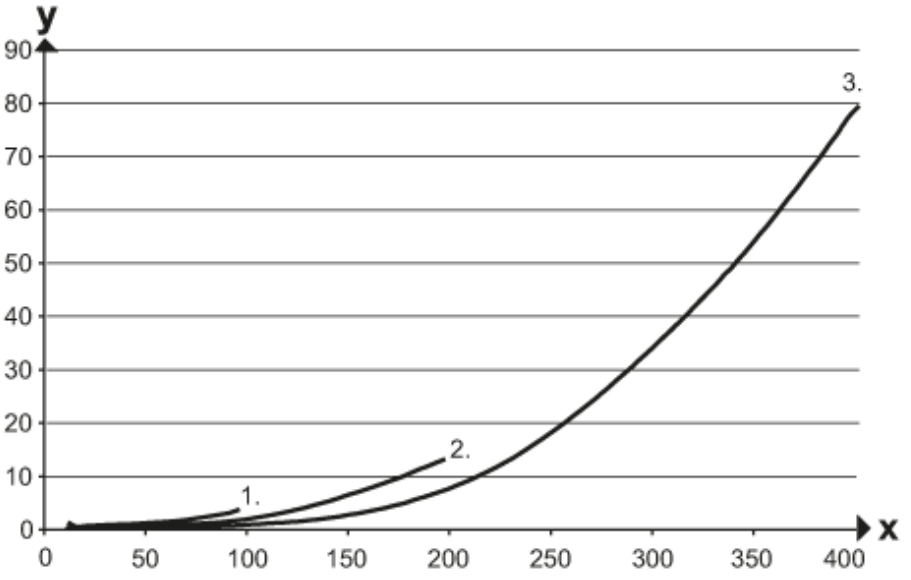

x: distance sensor/object [mm]

y: min. distance object/background [mm]

1 = object black (6 % remission) , background white (90 % remission)

2 = object grey (18 % remission) , background white (90 % remission)

3 = object white (90 % remission) , background white (90 % remission)