RAMSES 701 S

Item no.: 7010003

Climate control
Room thermostats

Description

- Electronic room thermostats for all types of heating, e.g. gas, water, electric heating etc.
- Snap function, easy installation without screws
- Temperature control via control wheel
- Rings under the adjustment wheel to limit the target temperature
- Temperature setting range 5 ... 30°C

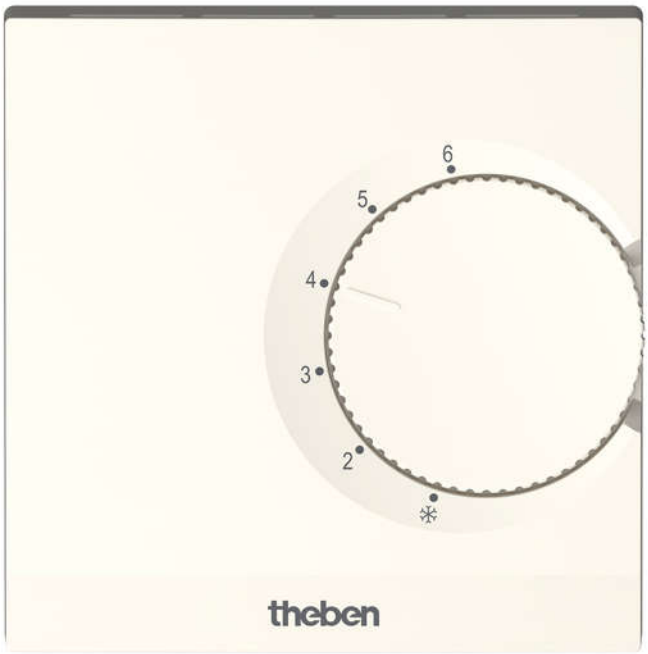

Technical data

	RAMSES 701 S
Operating voltage	230 V AC
Frequency	50 - 60 Hz
Type of contact	NC contact
Switching output	Not potential-free
Switching capacity	10 A (at 230 V AC, cos φ = 1)
Setting range temperature	5°C ... 30°C
Function	Electronic

	RAMSES 701 S
Hysteresis	–
Control accuracy	± 0.25 K
Colour	White (similar RAL 9010)
Installation type	Surface-mounted
Type of protection	IP 40
Protection class	II according to EN 60 730-1

Connection example

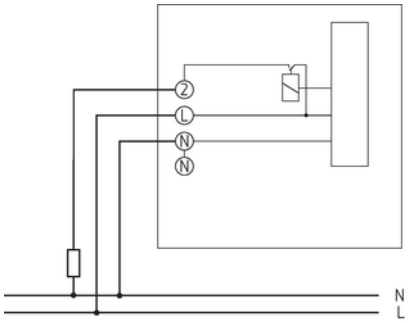

Scale drawings

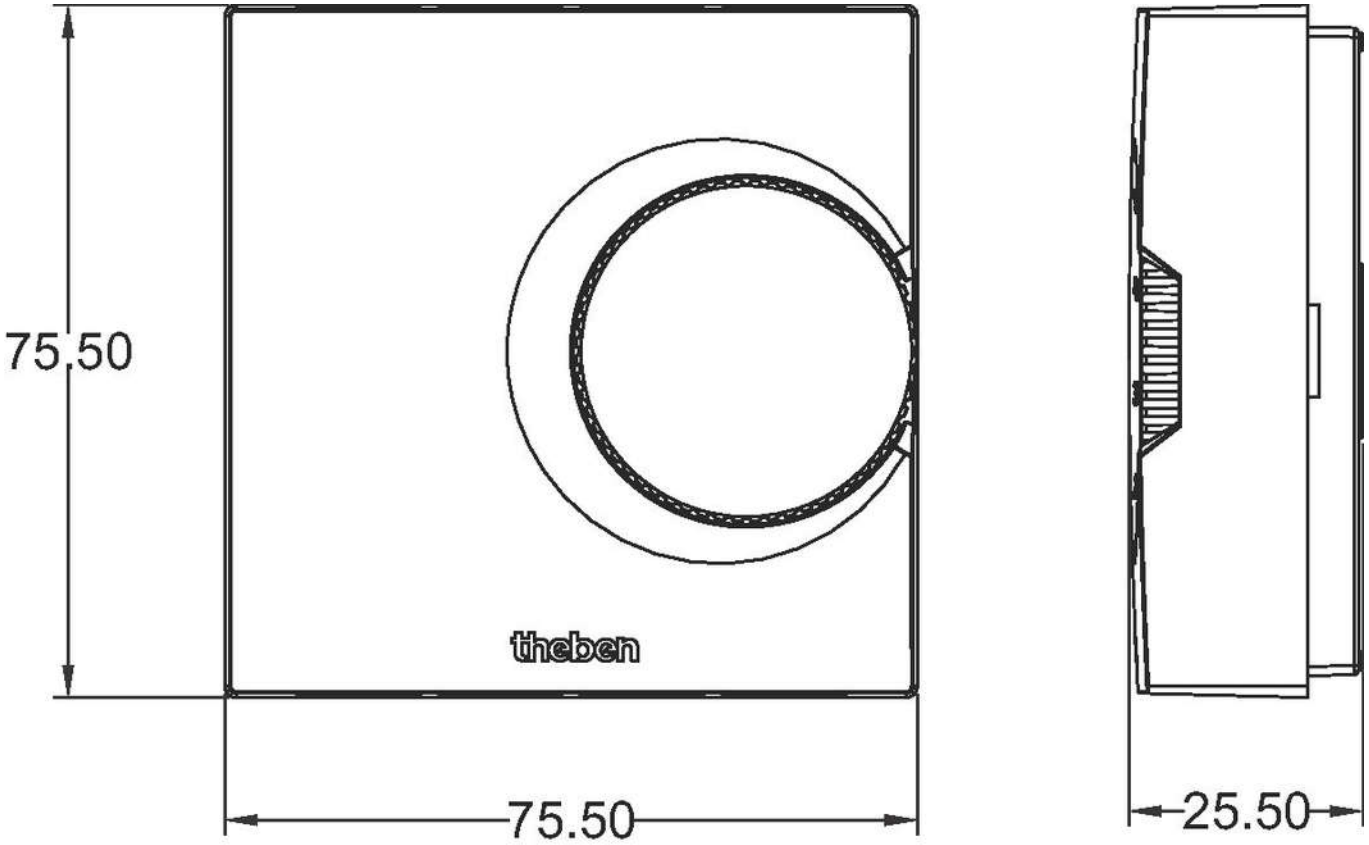

RAMSES 701 S

Item no.: 7010003

Accessories

Adapter plate RAMSES 714
Item no.: 9070212



Actuator ALPHA 5 230 V
Item no.: 9070441

