Distributor, Series AS5-DIS

R412009251

2024-03-20

Series AS5

The AVENTICS Series AS5 is a modular, versatile maintenance unit for universal application. This Series offers compact dimensions, is highly efficient, lightweight and easy-to-use. The AVENTICS Series AS guarantees reliability, safety, and efficiency with a simplified assembly and maintenance efforts.



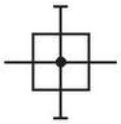

Technical data

Industry	Industrial
Parts	Distributor
Port	G 1
Type	Distributor
Type	Can be assembled into blocks
Version	Distributor 2x
Mounting orientation	Any
Min. working pressure	0 bar
Max. working pressure	16 bar
Min. ambient temperature	-10 °C
Max. ambient temperature	50 °C
Medium	Compressed air Neutral gases
Nominal flow Qn	18000 l/min
Nominal flow Qn 1 to 2	18000 l/min
Nominal flow Qn 1 to 3	8500 l/min
Nominal flow Qn 1 to 5	12000 l/min
Weight	0.648 kg
Housing material	Polyamide
Material front plate	Acrylonitrile butadiene styrene

Seal material	Acrylonitrile butadiene rubber
Material threaded bushing	Die cast zinc
	R412009251

Technical information

The pressure dew point must be at least 15 °C less than ambient and medium temperature and may not exceed 3 °C.

Nominal flow Qn with secondary pressure p2 = 6 bar at Δp = 1 bar

A change in the flow direction (from air supply on the left to air supply on the right) occurs by rotating installation by 180° about the vertical axis. Please see the operating instructions for further details.

Suitable for direct mounting of a PE2 and PM1 series pressure sensor (flange version).

Dimensions

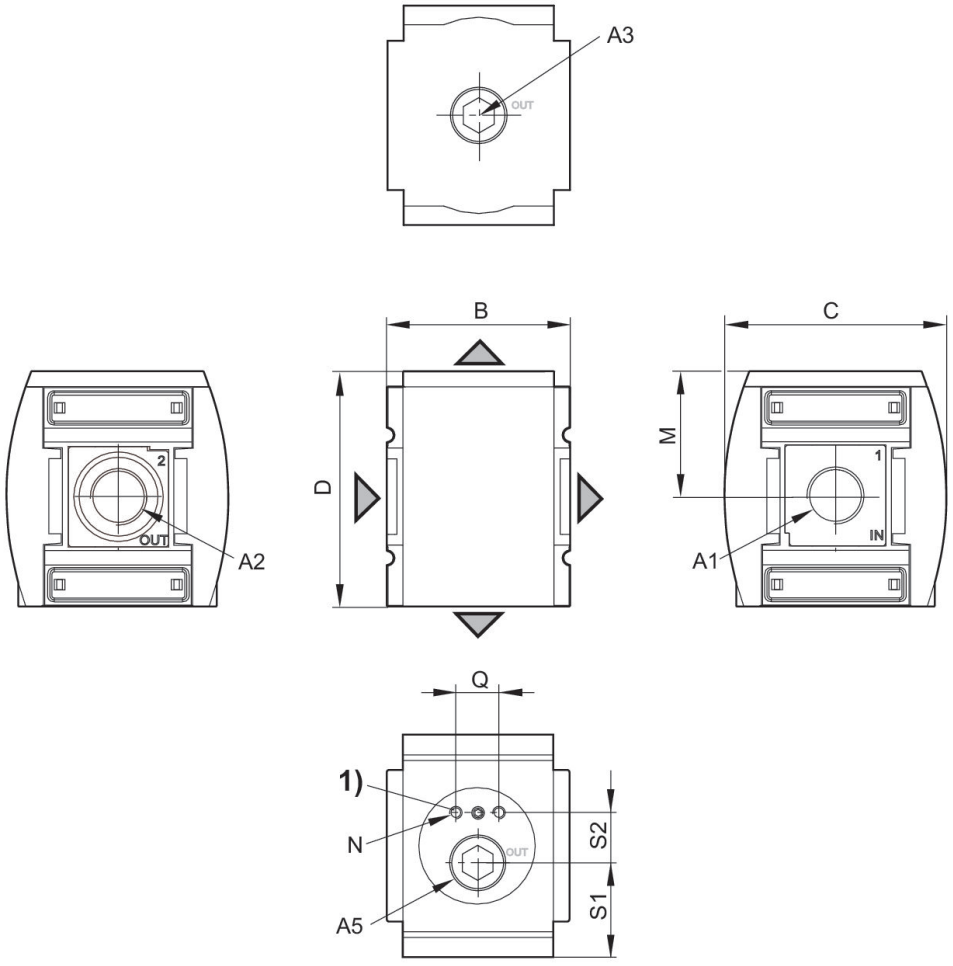

A1 = input A2 = output A3 = output A5 = output
1) Mounting thread for pressure sensor

Distributor, Series AS5-DIS

R412009251

2024-03-20

Accessories overview

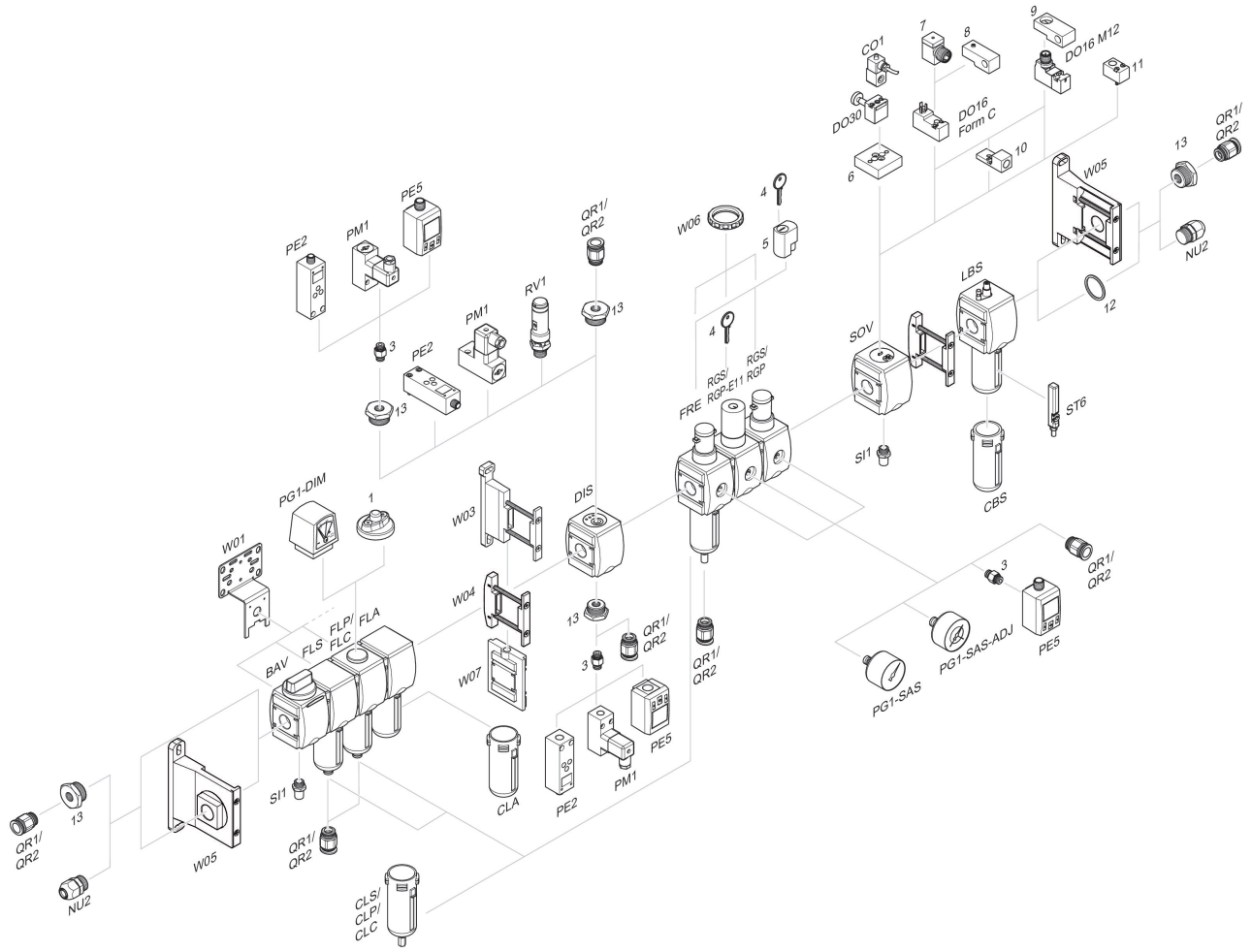

1 = contamination display 3 = Double nipple 4 = Key for E11 locking 5 = mortise lock 6 = Transition plate DO30 7 = Adapter, Series CON-VP 8 = Mounting aid DO16, form C 9 = Mounting aid DO16, M12 10 = Adapter for external pilot air 11 = Adapter pneumatic operation 12 = Sealing ring 13 = Reducing nipple

Dimensions in mm

Part No.	A1	A2	A3	A5	B	C	D	M	N
R412009250	G 3/4	G 3/4	G 3/4	G 3/4	85	103	109	58	M5
R412009251	G 1	G 1	G 3/4	G 3/4	85	103	109	58	M5

Part No.	Q	S1	S2
R412009250	20	44.5	22
R412009251	20	44.5	22