Reservoir, Series AS2-CLS/ -CLP/ -CLC

2024-03-19

R412006345

Series AS2

Qn = 14500 l/min

Technical data

Industry	Industrial
Parts	Reservoir
Reservoir	reservoir, metal, with inspection glass
Filter reservoir volume	28 cm³
Condensate drain	fully automatic, open without pressure
inspection glass	with window
Max. working pressure	16 bar
Min. ambient temperature	-10 °C
Max. ambient temperature	50 °C
Min. medium temperature	-10 °C
Max. medium temperature	50 °C
Medium	Compressed air
Weight	0.39 kg

Material

Material reservoir	Die cast zinc
Seal material	Acrylonitrile butadiene rubber
Part No.	R412006345

Technical information

The pressure dew point must be at least 15 °C less than ambient and medium temperature and may not exceed 3 °C.

The oil content of compressed air must remain constant during the life cycle.

Use only the approved oils from AVENTICS. Further information can be found in the “Technical information” document (available in https://www.emerson.com/en-us/support).

Dimensions in mm

Reservoir, Series AS2-CLS/ -CLP/ -CLC

2024-03-19

R412006345

Fig. 1

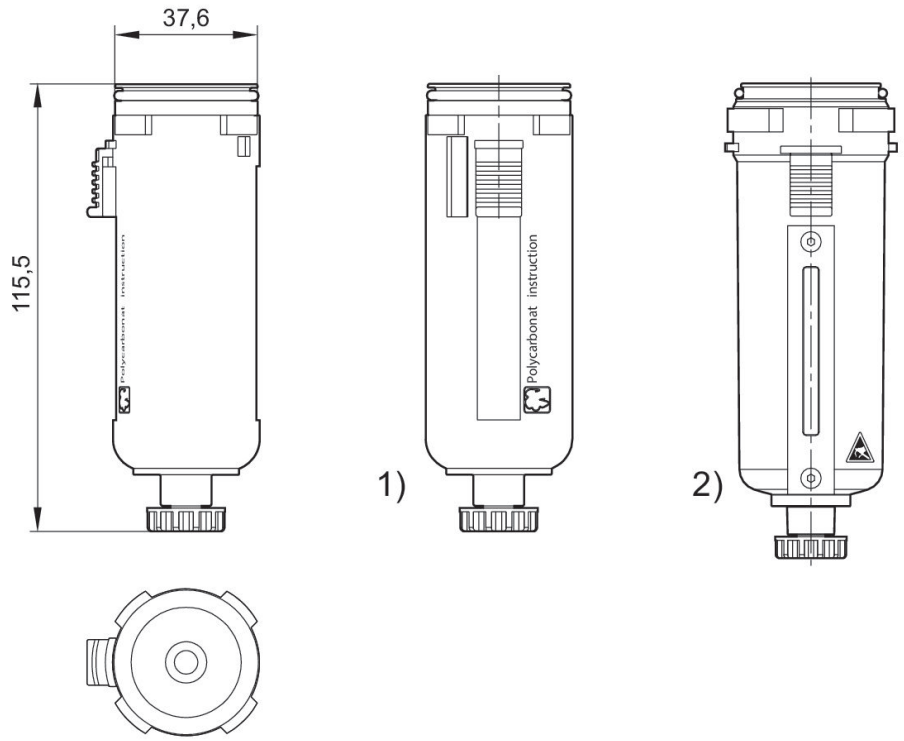

1) Plastic reservoir and protective guard with window
2) Metal reservoir with inspection glass

Dimensions in mm

Fig. 2

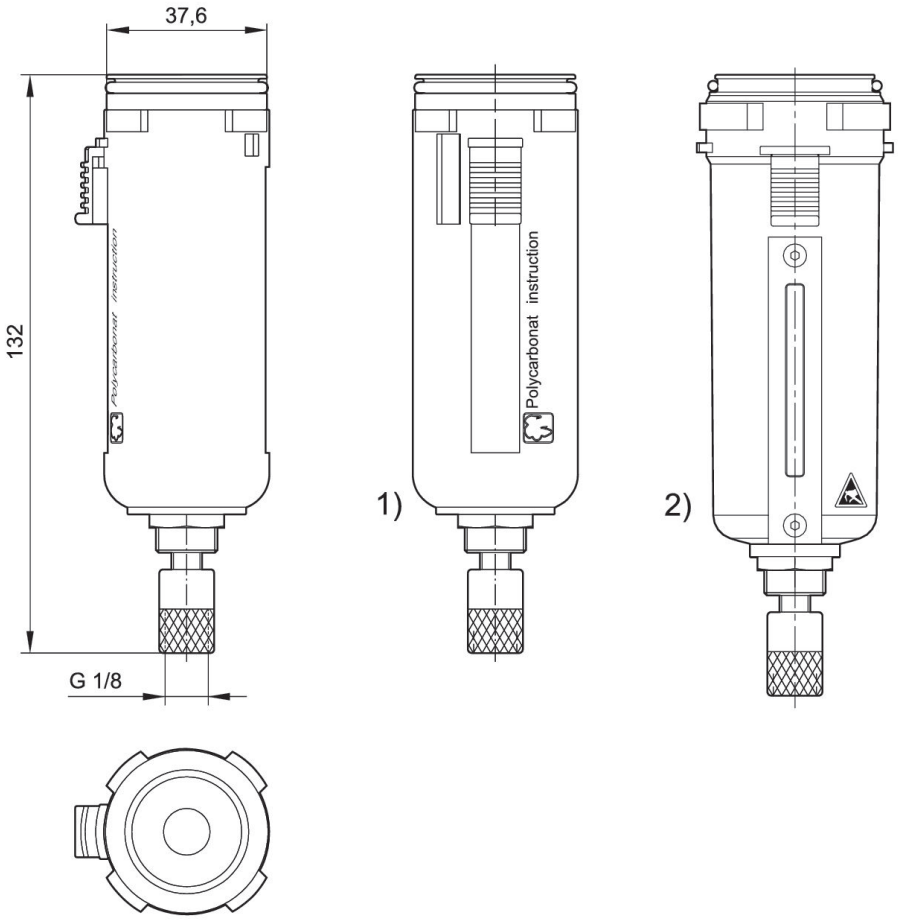

1) Plastic reservoir and protective guard with window
2) Metal reservoir with inspection glass