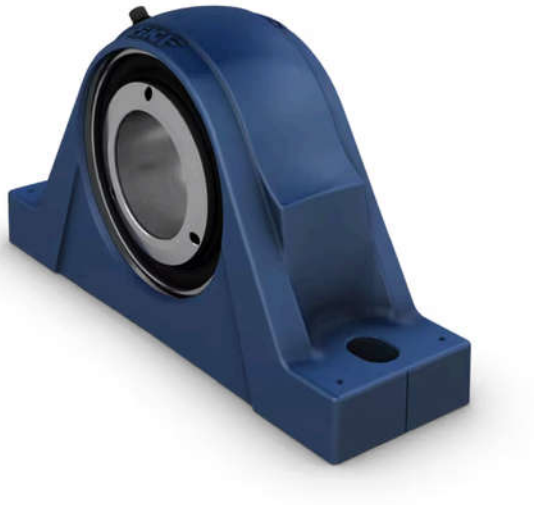

Image may differ from product. See technical specification for details.

SYNT 40 LTS

Pillow block roller bearing unit, two-bolt, SKF ConCentra locking

Pillow (plummer) block roller bearing units and take-up roller bearing units consist of a spherical or tapered roller bearing mounted in a non-split housing that can be bolted to a support surface. This variant has a spherical roller bearing, a two-bolt base and SKF ConCentra locking, creating a true concentric tight fit, and setting the correct internal

clearance within the bearing. The units are sealed and lubricated and ready to use. This bearing unit covers a wide range of requirements, in metric dimensions.

- Ready to mount
- Robust
- Factory lubricated and sealed
- Quick mounting
- Long service life

Overview

Dimensions

Shaft diameter	40 mm
Centre height (pillow block)	60 mm
Housing overall width	60 mm
Centre distance between bolt holes	170 mm
Attachment bolt diameter	12 mm
Bearing width, total	65 mm

Performance

Basic dynamic load rating	96.5 kN
Basic static load rating	90 kN
Limiting speed	5 900 r/min

Properties

Housing type	Pillow block
Number of bolt holes for fasteners	2
Bearing insert	Spherical roller bearing
Retaining feature, inner ring	SKF ConCentra
Bearing position	Non-locating
Bore type	Cylindrical
Material, housing	Cast iron
Material, bearing	Bearing steel
Coating	Without
Bearing housing seal type	Labyrinth seal
Sealing, unit	Optional end cover
Lubricant	Grease
Relubrication hole	With
Grease fitting	With

Logistics

Product net weight	4.02 kg
eClass code	23-05-16-90

UNSPSC code	31171537

Technical specification

Metric/inch series	Metric
Bearing insert	Spherical roller bearing
Bearing position	Non-locating
Locking method	SKF ConCentra
Bearing housing seal type	Labyrinth seal

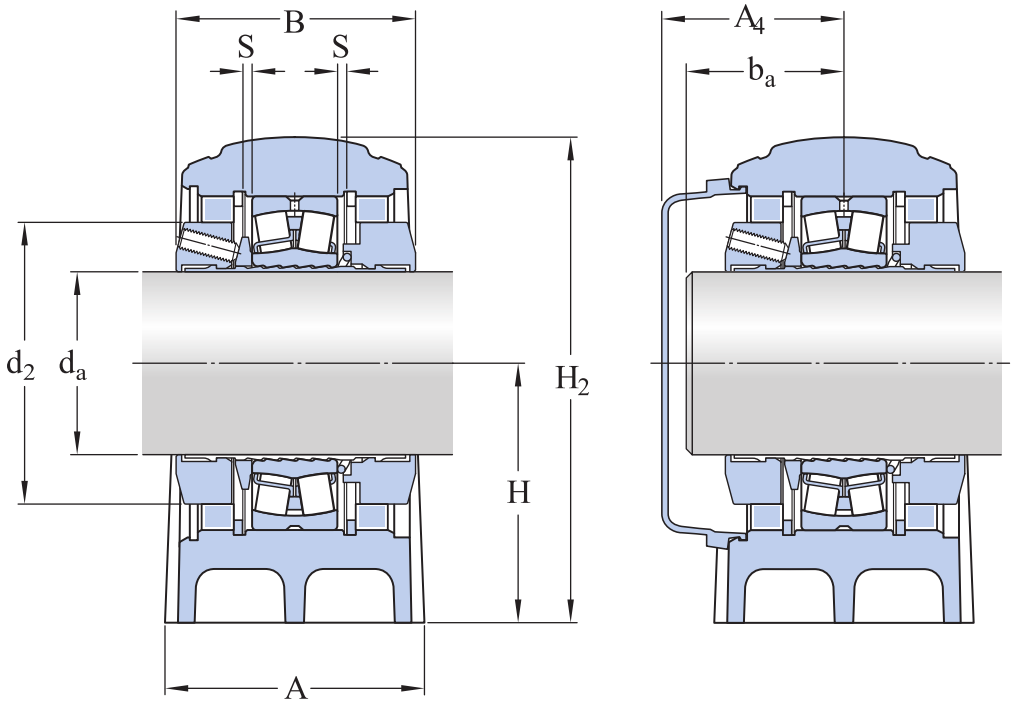

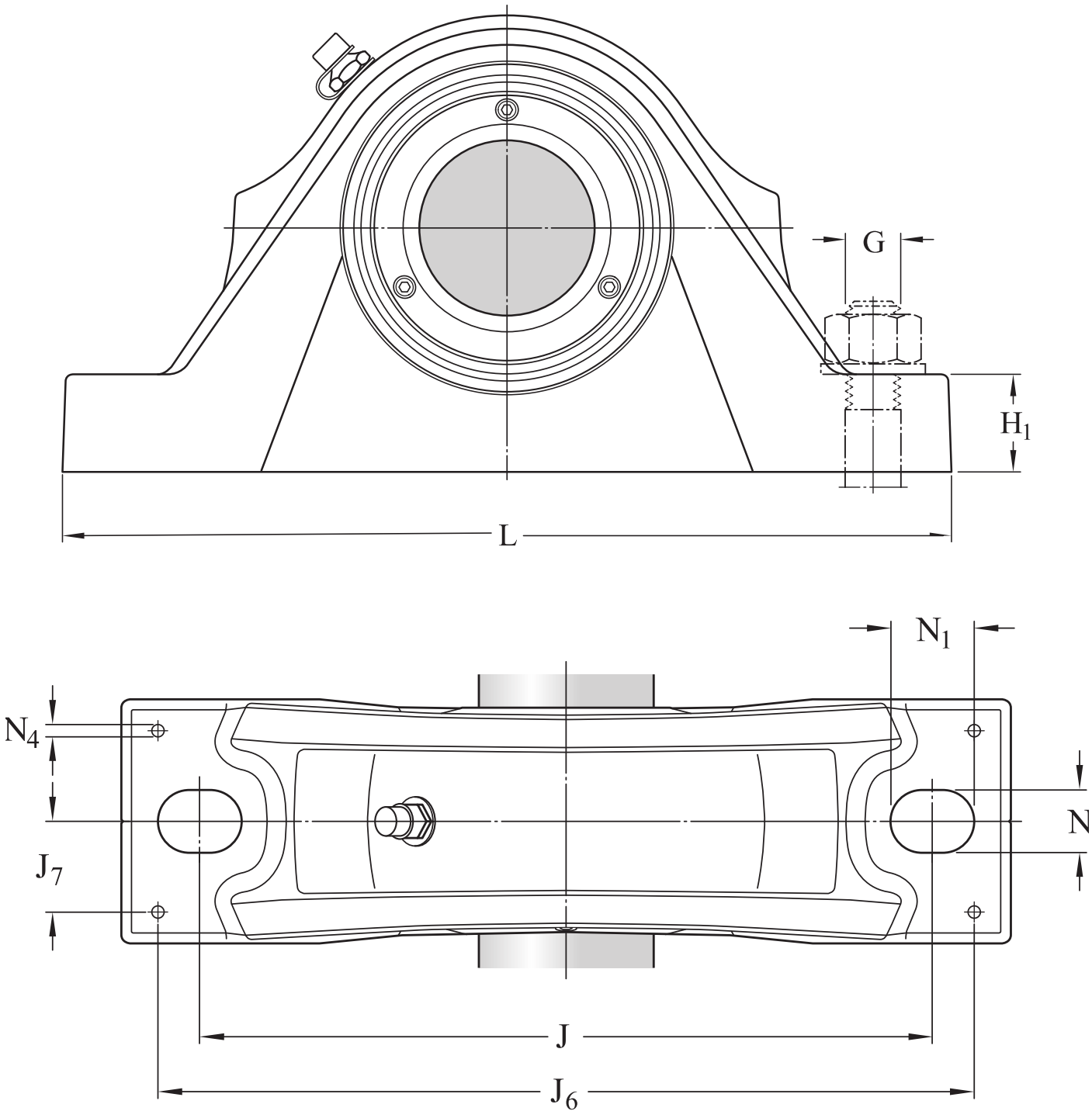

Dimensions

d_a	40 mm	Shaft diameter
d_2	66 mm	Collar outer diameter
A	60 mm	Housing foot width
B	65 mm	Inner ring width

H	60 mm	Height base to center
H_1	25 mm	Housing foot height
H_2	114 mm	Housing height
J	170 mm	Distance of attachment bolts
L	205 mm	Housing length
N	15 mm	Width foot slot width
N_1	20 mm	Length of attachment bolt hole
S	2.5 mm	Axial displacement

SHAFT END

A_4	51 mm	Distance bearing centre line to end cover
b_a	max. 43 mm	Distance bearing centre line to shaft end
b_a	min. 34 mm	Distance bearing centre line to shaft end

DOWEL PINS

J_6	185 mm	Distance dowel pins
J_7	21 mm	Distance dowel pins
N_4	6 mm	Pin hole diameter

Calculation data

Basic dynamic load rating	C	96.5 kN
Basic static load rating	C_0	90 kN
Fatigue load limit	P_u	9.8 kN
Limiting speed		5 900 r/min
Limiting value	e	0.28
Calculation factor	Y_1	2.4
Calculation factor	Y_2	3.6
Calculation factor	Y_0	2.5
Bearing mean diameter	d_m	60 mm

Axial holding force of the locking mechanism	P_a	15 kN

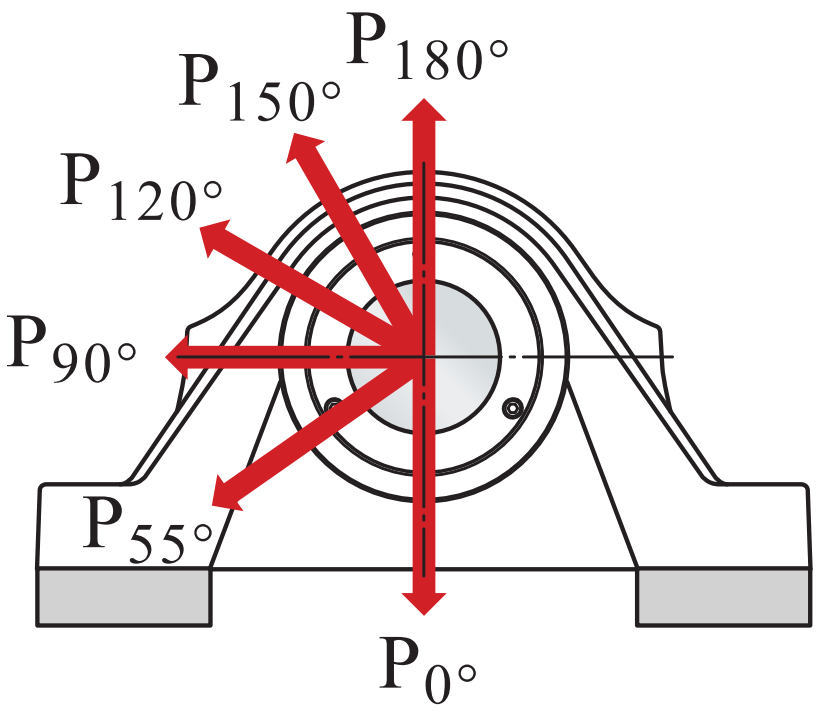

Breaking loads

$P_{0°}$	160 kN	Breaking load
$P_{55°}$	265 kN	Breaking load
$P_{90°}$	160 kN	Breaking load
$P_{120°}$	100 kN	Breaking load
$P_{150°}$	90 kN	Breaking load
$P_{180°}$	110 kN	Breaking load

Mounting information

Attachment bolt diameter	G	12 mm
Tightening torque for attachment bolts		80 N·m
Set screws		M6
Number of set screws		3
Tightening torque for set screws		8 N·m
Grease quantity for relubrication		4 g

Compatible products

Recommended product

End cover for bearing units	ECY 208

More Information

Product details

- Pillow block units - metric series
- Pillow block units - inch series
- Permissible misalignment
- Locating / non-locating support
- Loads
- Temperature limits
- Permissible speed
- Lubrication
- Mounting and dismounting
- Condition Monitoring
- Associated products
- Ordering information
- Designation system for SKF Pillow block roller bearing units

Engineering information

- Principles of selecting mounted bearing solutions
- Bearing failure and how to prevent it

Engineering tools

- SKF Product select
- SKF mounting and dismounting instructions

Terms of use

By accessing and using this website / app owned and published by AB SKF (publ.) (556007-3495 · Gothenburg) (“SKF”), you agree to the following terms and conditions:

Warranty Disclaimer and Limitation of Liability

Although every care has been taken to assure the accuracy of the information on this website / app, SKF provides this information "AS IS" and DISCLAIMS ALL WARRANTIES, EXPRESS OR IMPLIED, INCLUDING, BUT NOT LIMITED TO, IMPLIED WARRANTIES OF MERCHANTABILITY AND FITNESS FOR A PARTICULAR PURPOSE. You acknowledge that your use of this website / app is at your sole risk, that you assume full responsibility for all costs associated with use of this website / app, and that SKF shall not be liable for any direct, incidental, consequential, or indirect damages of any kind arising out of your access to, or use of the information or software made available on this website / app.

Any warranties and representations in this website / app for SKF products or services that you purchase or use will be subject to the agreed upon terms and conditions in the contract for such product or service.

Further, for non-SKF websites / apps that are referenced in our website / app or where a hyperlink appears, SKF makes no warranties concerning the accuracy or reliability of the information in these websites / apps and assumes no responsibility for material created or published by third parties contained therein. In addition, SKF does not warrant that this website / app or these other linked websites / apps are free from viruses or other harmful elements.

Third Party Services

When viewing YouTube content via the SKF website(s) (i.e. using YouTube API Services), you agree to be bound by the YouTube Terms of Service.

Copyright

Copyright in this website / app copyright of the information and software made available on this website / app rest with SKF or its licensors. All rights are reserved. All licensed material will reference the licensor that has granted SKF the right to use the material. The information and software made available on this website / app may not be reproduced, duplicated, copied, transferred, distributed, stored, modified, downloaded or otherwise exploited for any commercial use without the prior written approval of SKF. However, it may be reproduced, stored and downloaded for use by individuals without prior written approval of SKF. Under no circumstances may this information or software be supplied to third parties.

This website /app includes certain images used under license from Shutterstock, Inc.

Trademarks and Patents

All trademarks, brand names, and corporate logos displayed on the website / app are the property of SKF or its licensors, and may not be used in any way without prior written approval by SKF. All licensed trademarks published on this website / app reference the licensor that has granted SKF the right to use the trademark. Access to this website / app does not grant to the user any license under any patents owned by or licensed to SKF.

Changes

SKF reserves the right to make changes or additions to this website / app at any time.