KG5071

Capacitive sensor

KG-3080NFPKG/2T/US

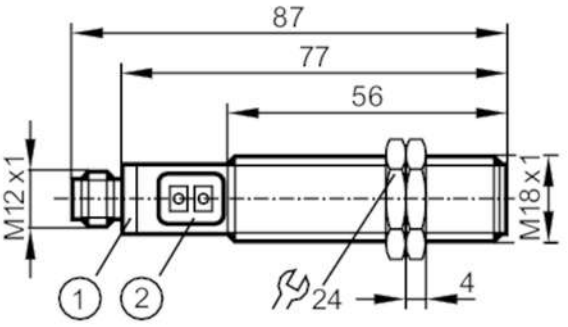

1 LED ring
2 programming buttons

Product characteristics		
Electrical design		PNP
Output function		normally open / normally closed; (selectable)
Sensing range	[mm]	8
Communication interface		IO-Link
Housing		threaded type
Dimensions	[mm]	M18 x 1 / L = 87
Electrical data		
Operating voltage	[V]	10...36 DC
Current consumption	[mA]	< 20
Protection class		II
Reverse polarity protection		yes
Measuring principle		capacitive
Outputs		
Electrical design		PNP
Output function		normally open / normally closed; (selectable)
Max. voltage drop switching output DC	[V]	2.5
Permanent current rating of switching output DC	[mA]	200
Switching frequency DC	[Hz]	10
Short-circuit proof		yes
Overload protection		yes
Detection zone		
Sensing range	[mm]	8
Accuracy / deviations		
Hysteresis	[% of Sr]	1...15
Switch point drift	[% of Sr]	-20...20

KG5071

Capacitive sensor

KG-3080NFPKG/2T/US

Interfaces			
Communication interface		IO-Link	
Transmission type		COM1 (4,8 kBaud)	
IO-Link revision		1.1	
SDCI standard		IEC 61131-9 CDV	
Profiles		Smart Sensor	
SIO mode		yes	
Min. process cycle time	[ms]	101	
Supported DeviceIDs		Type of operation	DeviceID
		Default	387
Operating conditions			
Ambient temperature	[°C]	-25...80	
Note on ambient temperature		temperature of the sensing face: -25...110 °C	
Protection		IP 65; IP 67	
Tests / approvals			
EMC		EN 61000-4-2 ESD	8 kV AD
		EN 61000-4-3 HF radiated	10 V/m
		EN 61000-4-4 Burst	2 kV
		EN 61000-4-6 HF conducted	3 V
		EN 55011	class B
Vibration resistance		EN 60068-2-27 Ea	(10...55 Hz) / 1 mm amplitude, oscillation period 5 min., 30 min. per axis at resonance or 55 Hz
Shock resistance		EN 60068-2-27 Ea	30 g 6 shocks / 11 ms half-sine (x, y, z)
MTTF	[years]	652	
Mechanical data			
Weight	[g]	31.3	
Housing		threaded type	
Mounting		non-flush mountable	
Dimensions	[mm]	M18 x 1 / L = 87	
Thread designation		M18 x 1	
Materials		housing: PBT orange; pushbuttons: TPE-U; LED window: PC	
Displays / operating elements			
Display		switching status	1 x LED, yellow
Teach function		yes	
Electronic lock		yes	
Accessories			
Items supplied		lock nuts: 2	
Remarks			
Pack quantity		1 pcs.	

KG5071

Capacitive sensor

KG-3080NFPKG/2T/US

Electrical connection - plug

Connector: 1 x M12; coding: A

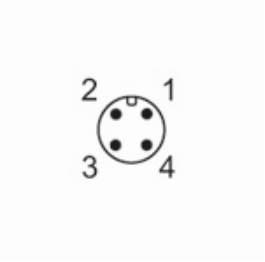

Connection

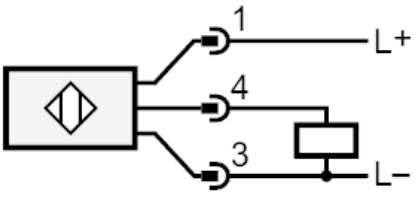

4: OUT / IO-Link