E12261

Wirable plug

SSTGH040MSSFKSG

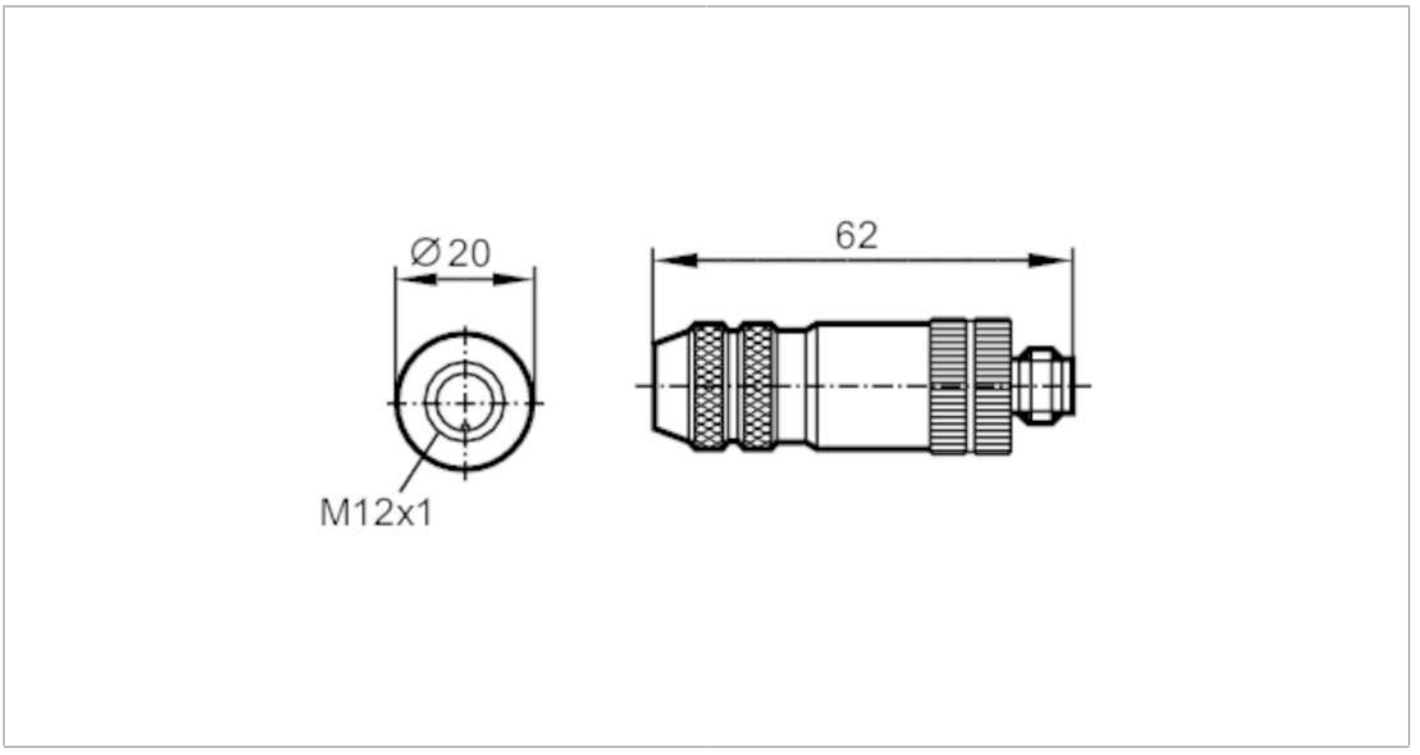

Application		
Special feature		Free from silicone; Gold-plated contacts
Free from silicone		yes
Electrical data		
Operating voltage	[V]	< 250 AC/DC
Max. current load total	[A]	4; (...40 °C)
Operating conditions		
Ambient temperature	[°C]	-25...85
Protection		IP 67
Mechanical data		
Weight	[g]	44.5
Dimensions	[mm]	20 x 20 x 62
Materials		diecast zinc nickel-plated
Moulded-body material		diecast zinc, nickel-plated
Material nut		brass, nickel-plated
Remarks		
Pack quantity		1 pcs.
Electrical connection		
screw terminals: ...0.75 mm²; Cable sheath: Ø 6...8 mm		
Electrical connection - plug		
Connector: 1 x M12, straight; coding: A; Moulded body: diecast zinc, nickel-plated; Locking: brass, nickel-plated; Contacts: gold-plated; Shielded connection cable: shieldable		

E12261

Wirable plug

SSTGH040MSSFKSG



Connection

