AB105STR Alarm Horn Sounder & Xenon Strobe

The AB105STR combines a compact high output 113dB(A) alarm sounder with a powerful 5J Xenon strobe warning beacon. Featuring 64 alarm tone frequencies and 4 remotely activated stages/channels.

The low current consumption and high SPL in a robust fire retardant enclosure ensure the AB105STR is suitable for all general signalling applications. The alarm horn sounder & strobe beacon may be connected for simultaneous or independent operation. The Xenon beacon component features an automatically synchronised flash rate of 1Hz. The DC voltage versions also have user selectable 1.5Hz (90 flashes per minute) and double-strike flash rates. The double strike flash rate can be remotely activated via a third wire (as can alternative alarm tones on the horn sounder) enabling a audible and visual communication of a two stage alarm condition.

Features

- Automatic synchronisation on multi-sounder system
- Synchronised flash rates
- Continuously rated
- Stainless steel fixings
- Unit can be mounted using external lugs or internal fixing positions
- Dual M20x1.5mm threaded cable entries – adaptors available
- Duplicate pluggable cable terminations – Class A
- Diode polarized for use in supervised circuits
- 64 alarm tone frequencies and 4 remotely activated alarm stages
- Available with custom tone configurations and frequencies
- Can be mounted in any orientation

Approvals

- UKCA
- CE
- EAC: CU TR 04/2011 CU TR 20/2011
- Russian Marine Register of Shipping





Specification

Alarm Horn:	
Maximum output:	113dB(A) @ 1 m ±3dB [104dB(A) @ 10ft/3m ±3dB]
Nominal output:	106dB(A) @ 1m ±3dB [97dB(A) @ 10ft/3m ±3dB]
No. of tones:	64 (UKOOA / PFEER compliant)
No. of stages:	4
Volume control:	-12dB(A) tone dependent
Effective range:	58m/190ft @ 1KHz
In rush:	636mA within 4.0ms @ 24Vdc
Stage switching:	Negative (common positive)
Xenon Beacon:	
Energy:	5 Joules (5Ws)
Flash rate:	1Hz (60 fpm) DC units: Optionally 1.5Hz & double strike
Synchronisation:	1Hz flash rate automatically synchronised
Peak Candela:	500,000 cd – calculated from energy (J)
Eff. Intensity cd:	250 cd – calculated from energy (J)
Peak Candela:	49,788 cd* – measured ref. to I.E.S.
Eff. Intensity cd:	125 cd* – measured ref. to I.E.S.
Tube life:	70% emissions after 8 million flashes
General:	
Ingress protection:	IP65
Enclosure:	High impact UL94 V0 & 5VA FR ABS/PC
Lens colour filter:	Field replaceable UV stable PC
Terminals:	0.5 – 2.5mm² (20-14 AWG)
Line monitoring:	Diode polarized for use in supervised circuits
Operating:	-40 to +66°C [-40° to +151°F]
Storage:	-40 to +70°C [-40° to +158°F]
Relative humidity:	95% at 20°C [68°F]
Weight DC:	1.00kg / 2.20lbs
Weight AC:	1.25kg / 2.75lbs

Part Codes

Variable:	Identifier:	Description:
Product type:	AB105STR	Combined alarm horn sounder & Xenon strobe
Voltage:	DC012 DC024 DC048 AC024 AC115 AC230	12Vdc (10-15Vdc) 24Vdc (20-28Vdc) 48Vdc (42-54Vdc) 24Vac 50/60Hz 115Vac 50/60Hz 230Vac 50/60Hz
Back box/cable entries: [e]	A B	Back box with mounting lugs – 2 x M20x1.5mm entries Back box with mounting lugs – 2 × 1/2"NPT (adaptors)
Stopping plug material: [m]	A	ABS
Equip. tag/Duty label: [s]	0 1 2	No equip. tag or Duty label 316 (A4) St/St Equip. tag/Duty label Metalised Polyester Equip. tag/Duty label
Product version: [v]	A	RMRS, EAC, CE, UKCA
Product option: [o]	1 X Z	Standard product Custom configuration – contact E2S Custom alarm tone software – contact E2S
Enclosure: [x]	R G	Red (RAL 3000) Grey (RAL7038)
Lens colour: [y]	A B C G M R Y	Amber Blue Clear Green Magenta Red Yellow

Current Consumption

Product Version:	Nominal Voltage:	Voltage Range:	Beacon Current:	Horn Current:
DC012	12Vdc	10-15Vdc	600mA	17mA
DC024	24Vdc	20-28Vdc	300mA	33.5mA
DC048	48Vdc	42-54Vdc	250mA	113mA
AC024	24Vac	22-26Vac 50/60Hz	300mA	42.5mA
AC115	115Vac	±10% 50/60Hz	70mA	25mA
AC230	230Vac	±10% 50/60Hz	35mA	17mA

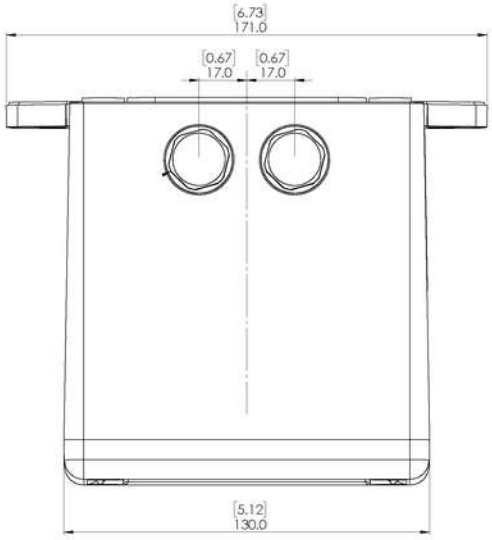

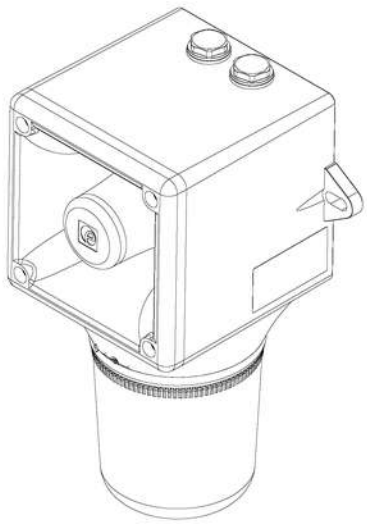

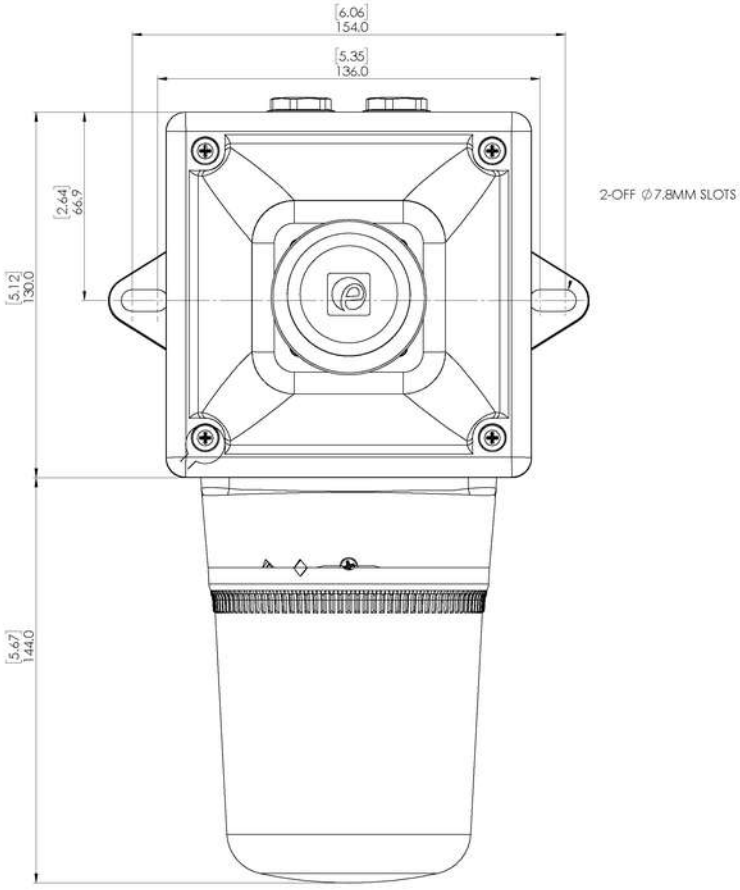

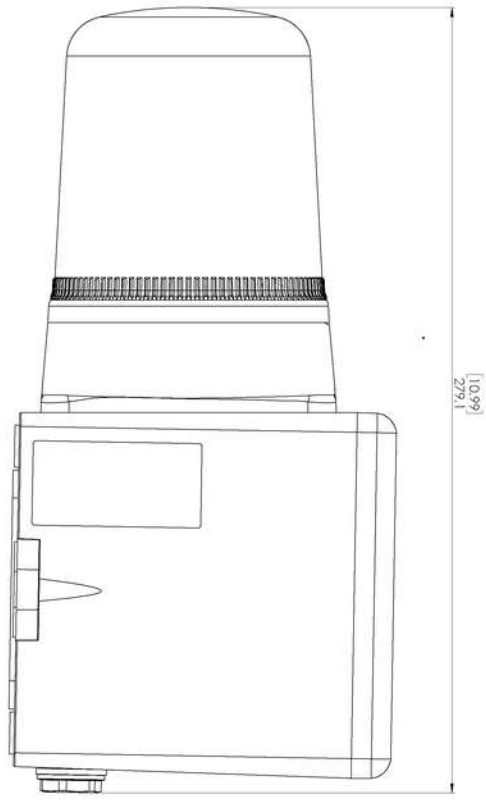

Tone table

S 1	Description	S 2	S 3	S 4
T 1	1000 Continuous - PFEER Toxic Gas	Any	T 2	T 44
T 2	1200/500 @ 1Hz Sweeping - DIN / PFEER P.T.A.P.	Any	T 3	T 44
T 3	1000 @ 0.5Hz (1s on, 1s off) Intermittent - P...	Any	T 2	T 44
T 4	1.4KH-1.6KHz 1s, 1.6KHz-1.4KHz 0.5s - NF C 48...	Any	T 24	T 1
T 5	544(100mS)/440 (400mS) - NF S 32-001	Any	T 19	T 1
T 6	1500/500 - (0.5s on , 0.5s off) x3 + 1s gap -...	Any	T 44	T 1
T 7	500-1500Hz Sweeping 2 sec on 1 sec off - AS4428	Any	T 44	T 1
T 8	500/1200Hz @ 0.26Hz(3.3s on, 0.5s off) - NEN ...	Any	T 24	T 35
T 9	1000 (1s on, 1s off)x7 + (7s on, 1s off) - IM...	Any	T 34	T 1
T 10	1000 (1s on, 1s off)x7 + (7s on, 1s off) - IM...	Any	T 34	T 1
T 11	420(0.5s on, 0.5s off)x3 + 1s gap - ISO 8201 ...	Any	T 1	T 8
T 12	1000(0.5s on, 0.5s off)x3 + 1s gap - ISO 8201...	Any	T 1	T 8
T 13	422/775 - (0.85 on, 0.5 off) x3 + 1s gap - ...	Any	T 1	T 8
T 14	1000/2000 @ 1Hz - Singapore	Any	T 3	T 35
T 15	300 Continuous	Any	T 24	T 35
T 16	440 Continuous	Any	T 24	T 35
T 17	470 Continuous	Any	T 24	T 35
T 18	500 Continuous - IMO code 2 (Low)	Any	T 24	T 35
T 19	554 Continuous	Any	T 24	T 35
T 20	660 Continuous	Any	T 24	T 35
T 21	800 Continuous - IMO code 2 (High)	Any	T 24	T 35
T 22	1200 Continuous	Any	T 24	T 35
T 23	2000 Continuous	Any	T 3	T 35
T 24	2400 Continuous	Any	T 20	T 35
T 25	440 @ 0.83Hz (0.60s on, 0.60s off) Intermittent	Any	T 44	T 8
T 26	470 @ 0.9Hz (0.55s on, 0.55s off) Intermittent	Any	T 44	T 8
T 27	470 @ 5Hz (0.10s on, 0.10s off) Intermittent	Any	T 44	T 8
T 28	544 @ 1.14Hz (0.43s on, 0.44s off) Intermittent	Any	T 24	T 8
T 29	655 @ 0.875Hz (0.57s on, 0.57s off) Intermittent	Any	T 44	T 8
T 30	660 @ 0.28Hz (1.80s on, 1.80s off) Intermittent	Any	T 24	T 8
T 31	660 @ 3.3Hz (0.15s on, 0.15s off) Intermittent	Any	T 24	T 8
T 32	745 @ 1Hz (0.50s on, 0.50s off) Intermittent	Any	T 24	T 8
T 33	800 (0.25s on, 1.00s off) Intermittent	Any	T 24	T 8
T 34	800 @ 2Hz (0.25s on, 0.25s off) - IMO code 3....	Any	T 24	T 8
T 35	1000 @ 1Hz (0.50s on, 0.50s off) Intermittent	Any	T 24	T 8
T 36	2400 @ 1Hz (0.50s on, 0.50s off) Intermittent	Any	T 24	T 8
T 37	2900 @ 5Hz (0.10s on, 0.10s off) Intermittent	Any	T 24	T 8
T 38	363/518 @ 1Hz (0.50s / 0.50s) Alternating	Any	T 8	T 19
T 39	450/500 @ 2Hz (0.25s / 0.25s) Alternating	Any	T 8	T 19
T 40	554/440 @ 1Hz (0.50s / 0.50s) Alternating	Any	T 24	T 19
T 41	554/440 @ 0.65Hz (0.76s / 0.76s) Alternating	Any	T 8	T 19
T 42	561/760 @ 0.83Hz (0.60s / 0.60s) Alternating	Any	T 8	T 19
T 43	780/600 @ 0.96Hz (0.52s / 0.52s) Alternating	Any	T 8	T 19
T 44	800/1000 @ 2Hz (0.25s / 0.25s) Alternating	Any	T 24	T 19
T 45	970/800 @ 2Hz (0.25s / 0.25s) Alternating	Any	T 8	T 19
T 46	800/1000 @ 0.875Hz (0.57s / 0.57s) Alternating	Any	T 24	T 19
T 47	2400/2900 @ 2Hz (0.25s / 0.25s) Alternating	Any	T 24	T 19
T 48	500/1200 @ 0.3Hz (1.67s / 1.67s) Sweeping	Any	T 24	T 12
T 49	560/1055 @ 0.18Hz (2.73s / 2.73s) Sweeping	Any	T 24	T 12
T 50	560/1055 @ 3.3Hz (0.15s / 0.15s) Sweeping	Any	T 24	T 12
T 51	600/1250 @ 0.125Hz (4s / 4s) Sweeping	Any	T 24	T 12
T 52	660/1200 @ 1Hz (0.50s / 0.50s) Sweeping	Any	T 24	T 12
T 53	800/1000 @ 1Hz (0.50s / 0.50s) Sweeping	Any	T 24	T 12
T 54	800/1000 @ 7Hz (0.07s / 0.07s) Sweeping	Any	T 24	T 12
T 55	800/1000 @ 50Hz (0.01s / 0.01s) Sweeping	Any	T 24	T 12
T 56	2400/2900 @ 7Hz (0.07s / 0.07s) Sweeping	Any	T 24	T 12
T 57	2400/2900 @ 1Hz (0.50s / 0.50s) Sweeping	Any	T 24	T 12
T 58	2400/2900 @ 50Hz (0.01s / 0.01s) Sweeping	Any	T 24	T 12
T 59	2500/3000 @ 2Hz (0.25s / 0.25s) Sweeping	Any	T 24	T 12
T 60	2500/3000 @ 7.7Hz (0.65s / 0.65s) Sweeping	Any	T 24	T 12
T 61	800Hz Motor Siren	Any	T 24	T 12
T 62	1200Hz Motor Siren	Any	T 24	T 12
T 63	2400Hz Motor Siren	Any	T 24	T 12
T 64	Simulated Bell	Any	T 21	T 12

No liability is accepted for any consequence of the use of this document. The technical specification of this unit is subject to change without notice due to our policy of continual product development. All dimensions are approximate. This unit is sold subject to our standard conditions of sale, a copy of which is available on request.