

Inductive sensor

NBN4-F29-E2

- 4 mm non-flush
- 3-wire DC

Dimensions

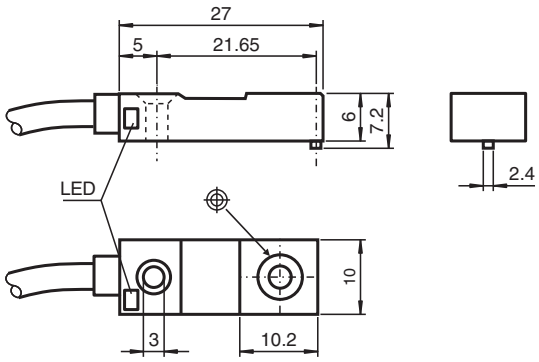

Technical Data

General specifications		
Switching function		Normally open (NO)
Output type		PNP
Rated operating distance	s_n	4 mm
Installation		non-flush
Output polarity		DC
Assured operating distance	s_a	0 ... 3.24 mm
Reduction factor r_{Al}		0.4
Reduction factor r_{Cu}		0.3
Reduction factor r_{304}		0.7
Output type		3-wire
Nominal ratings		
Operating voltage	U_B	4.75 ... 30 V DC
Switching frequency	f	0 ... 1000 Hz
Hysteresis	H	typ. 5 %
Reverse polarity protection		reverse polarity protected

Release date: 2020-05-07 Date of issue: 2020-05-07 Filename: 087175_eng.pdf

Technical Data

Short-circuit protection		pulsing
Voltage drop	U_d	≤ 3 V
Operating current	I_L	0 ... 100 mA
Off-state current	I_r	0 ... 0.5 mA typ. 0.1 µA at 25 °C
No-load supply current	I_0	≤ 10 mA
Time delay before availability	t_v	≤ 5 ms
Switching state indicator		LED, yellow
Functional safety related parameters		
$MTTF_d$		1680 a
Mission Time (T_M)		20 a
Diagnostic Coverage (DC)		0 %
Compliance with standards and directives		
Standard conformity		
Standards		EN 60947-5-2:2007 EN 60947-5-2/A1:2012 IEC 60947-5-2:2007 IEC 60947-5-2 AMD 1:2012
Approvals and certificates		
UL approval		cULus Listed, General Purpose
CSA approval		cCSAus Listed, General Purpose
CCC approval		CCC approval / marking not required for products rated ≤36 V
Ambient conditions		
Ambient temperature		-25 ... 70 °C (-13 ... 158 °F)
Storage temperature		-40 ... 85 °C (-40 ... 185 °F)
Mechanical specifications		
Connection type		cable PVC , 2 m
Core cross-section		0.14 mm²
Housing material		PPS
Sensing face		PPS
Degree of protection		IP67
Cable		
Cable diameter		3.5 mm ± 0.2 mm
Bending radius		> 10 x cable diameter

Connection

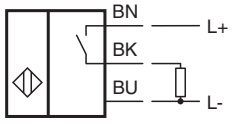

Release date: 2020-05-07 Date of issue: 2020-05-07 Filename: 087175_eng.pdf