C6 Hinge

Position control · Detent



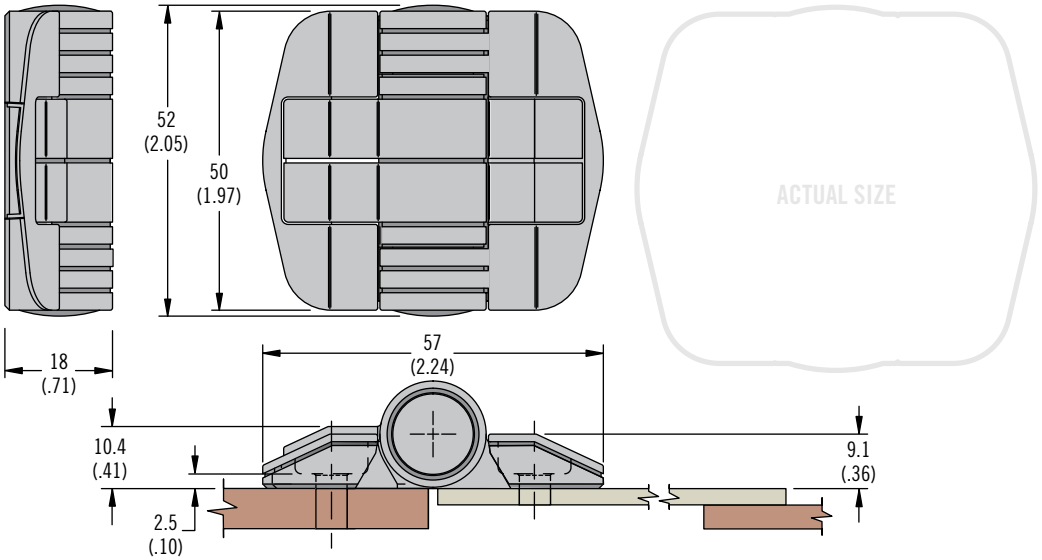

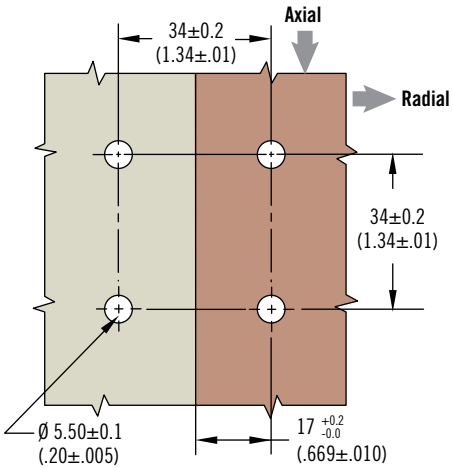

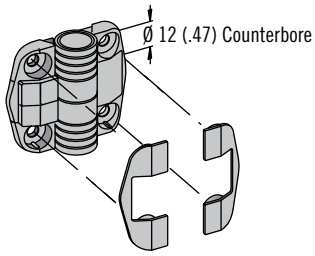

Type	Positioning Torque N·m (in·lbf)	Part Number	
		Stainless Steel Detent Tube	Hardened Steel Detent Tube
 No Detents	Free operating	C6-20	C6-0
 80 Degree	0.7 (6)	C6-21	C6-1
	1.1 (10)	C6-22	C6-2
	1.7 (15)	C6-23	C6-3
 115 Degree	0.7 (6)	C6-24	C6-4
	1.1 (10)	C6-25	C6-5
	1.7 (15)	C6-26	C6-6
 150 Degree	0.7 (6)	C6-27	C6-7
	1.1 (10)	C6-28	C6-8
	1.7 (15)	C6-29	C6-9

- **Holds doors open without secondary mechanical support**
- **Detents holds door at 80°, 115° or 150°**
- **All versions can be further opened to 180°**

Material and Finish

Acetal, black
Internal components:
Hardened steel on stainless steel

Performance Details

Radial load:
Max. static load: 450 N (100 lbf)
Average ultimate load:
2600 N (575 lbf)

Axial load:
Max. static load: 450 N (100 lbf)
Average ultimate load:
1800 N (400 lbf)

Cycle life:
Stainless steel: Up to 5000
Hardened steel: Up to 20,000

Operating temperature range:
-40°C (-40°F) to 80°C (180°F)

Installation Notes

Designed to accommodate M5 (No. 10) mounting hardware with a maximum head diameter of 10.1 (.40) and a maximum head height of 4 (.16).

Part Number

See table



G6 Hinge

Position control · Detent

- **Holds doors open without secondary mechanical support**
- **Detent holds door at 120° and 170°**
- **Can be opened to 180°**

Material and Finish

Acetal and nylon, black

Performance Details

Radial load:
Max. static load: 130 N (30 lbf)
Average ultimate load:
970 N (220 lbf)

Axial load:
Max. static load: 130 N (30 lbf)
Average ultimate load:
1450 N (325 lbf)

Cycle life: 10,000 cycles

Operating temperature range:
-20 °C (0° F) to 80° C (180° F)

Installation Notes

Screws not supplied

Hinge designed to accommodate M4 (No. 8) size Pan Head mounting hardware.

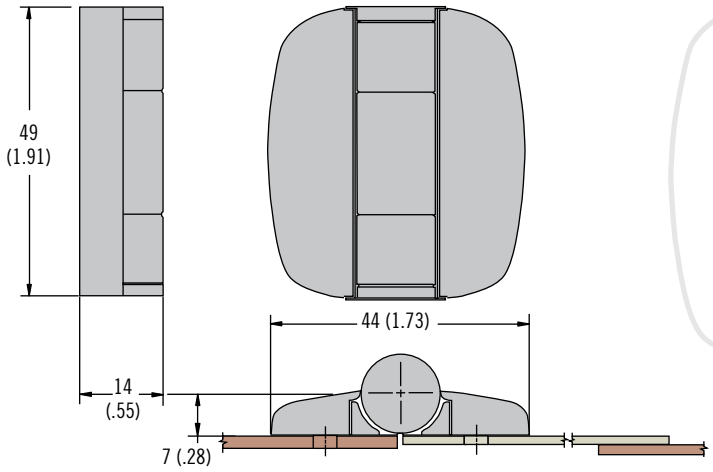

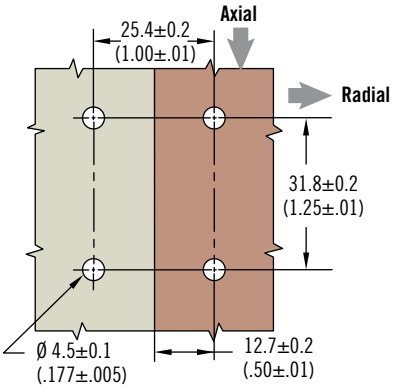

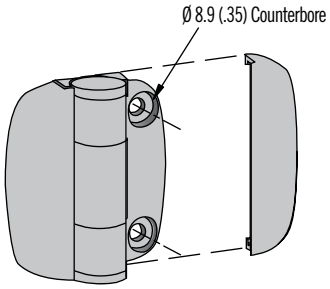

Part Number

See table

Part Number	Detent Angle	Positioning Torque
G6-0-1	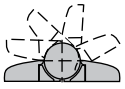 Free swinging (no detents)	~
G6-5-1	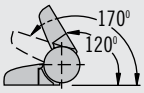	1.1 N•m (10 in•lbf)

INFO CLIC www.southco.com/G6

Dimensions in millimeters (inch) unless otherwise stated