74 Series - Outdoor Rainproof Network Box

Product Overview

- Cost competitive rainproof outdoor network enclosure
- No rain entry by the seamless construction without gasket
- Enclosure is rated to IP44, but it protects components in its internal upper compartment from rain (when installed vertically)
- ASA material is resistant to deterioration and discolouration from ultraviolet rays. Perfect for use as outdoor communication devices
- Bracket integrated in the rear of the box, with the integral slots designed for pole mounting via belts or clamps, while the hanging keyholes enable enclosure to be secured onto wall hooks or brackets
- PCB or components easily mounted to Tray part, which simply hooks and is secured by one screw to the enclosure, which comes with knock-out holes for wiring

SPECIFICATION	
Protection class	IP44
Operating teperature	-30°C to +60°C
Recommended torque	0.3 Nm
Material	UV-resistant ASA UL94HB

Technical Data

PART NUMBER	EXTERNAL DIMENSIONS			INTERNAL DIMENSIONS			KNOCK-OUT HOLES
	L	W	H	L	W	H	
CUE7410WH	140	75	35	86	55.5	18.5	Φ5.6 + Φ7.2
CUE7420WH	170	100	45	108	79	27.5	Φ5.6 + Φ7.2
CUE7430WH	210	125	55	132	101	37.5	Φ7 + Φ10

Standard Unit Includes

NO.	PART NAME	PIECES	MATERIAL	COLOUR / FINISH
1	Hood	1	ASA UL94HB	Off-white / Gloss
2	Tray	1	ASA UL94HB	Off-white / Gloss
3	Cover	1	ASA UL94HB	Off-white / Gloss
4	Screw	3	Stainless steel	Natural finish

The PCB mounting Tray (2) is secured with a single screw (4) to the main Hood (1), with a clip on access Cover (3).

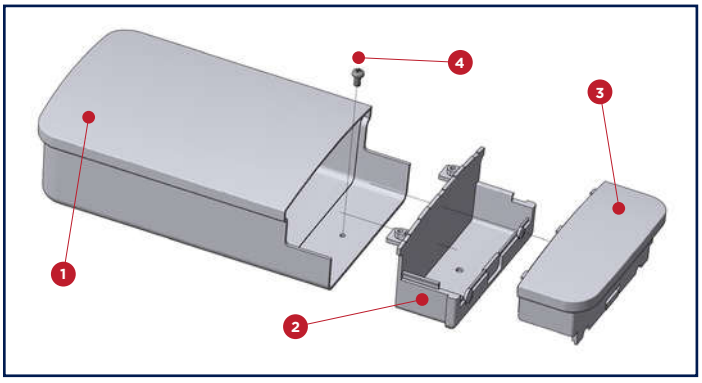

CUE7410WH



Technical Drawing

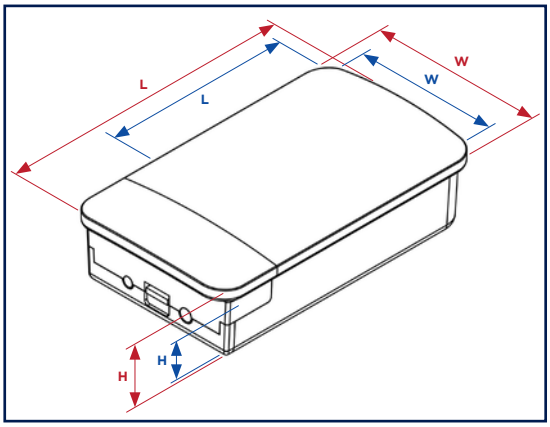

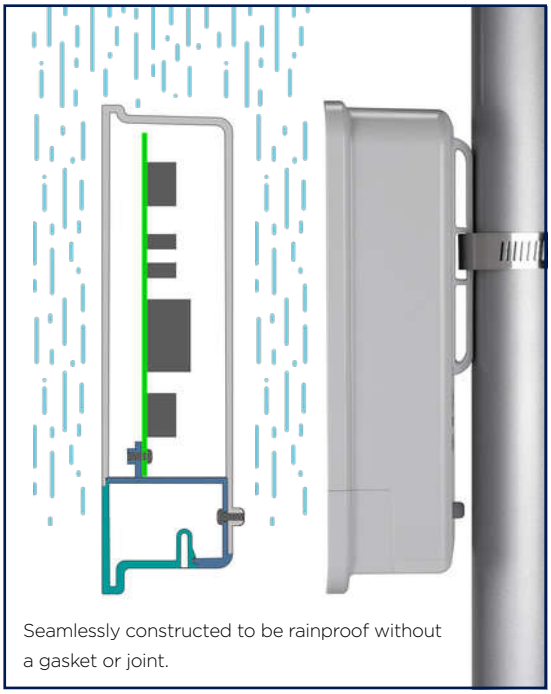

Seamlessly constructed to be rainproof without a gasket or joint.

74 Series - Outdoor Rainproof Network Box

Applications and Industries

Potential uses for the enclosures are as follows: Outdoor enclosure, Rainproof enclosure, UV-protected enclosure, Pole mount enclosure, Access point enclosure, IoT gateway enclosure, LoRaWAN enclosure and much more.

Enclosures can be customised with CNC milling and digital printing to fit your branding and connectivity requirements.







Pole clamp not included with bracket.

PCB Assembly

1. Fix PCB on the Tray with Screws.
2. Push Tray and fixed PCB along the grooves inside Hood.

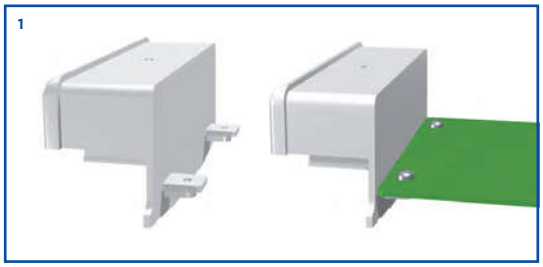

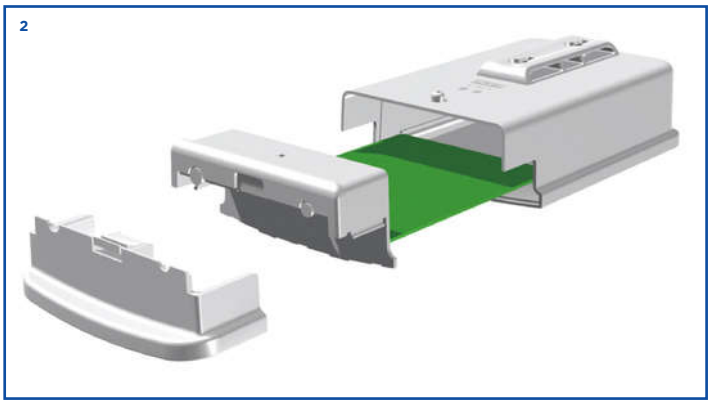

We operate a constant improvement policy, our products are subject to change without notice.