3.5mm pitch pluggable rising clamp terminal blocks

Product overview

- 2-12 pole solid block professional rising clamp terminals
- Moulded in green UL94-V0 flame retardant PA66
- Cable acceptance - 0.32 to 1.3mm² (28-16AWG) solid and stranded cable
- Polarised mouldings
- Pluggable male and female connectors
- Closed headers
- Horizontal and vertical female plug styles
- Anti solder wicking
- Captive screws
- Guided pin alignment
- cULus , VDE approved

SPECIFICATION	
Rating	UL=8A/300V, VDE=10A/250V
Insulation resistance	500M Ω/500V
Withstand voltage	AC2000V/1min
Contact resistance	20mΩ (max)
Working temperature	-40°C to +105°C
Moulding	UL94-V0 flame retardant PA66
Pin/terminal	Tin plated brass
Rising clamp	Brass, nickel plated
Screw/torque	M2 steel, zinc plated 0.2Nm
Recommended PCB hole size	ø1.4mm

Female connector

PART NO.	POLES	LENGTH
CTBP92HD/2	2	7.8mm
CTBP92HD/3	3	11.3mm
CTBP92HD/4	4	14.8mm
CTBP92HD/5	5	18.3mm
CTBP92HD/6	6	21.8mm
CTBP92HD/7	7	25.3mm
CTBP92HD/8	8	28.8mm
CTBP92HD/9	9	32.3mm
CTBP92HD/10	10	35.8mm
CTBP92HD/11	11	39.3mm
CTBP92HD/12	12	42.8mm

CTBP92HD



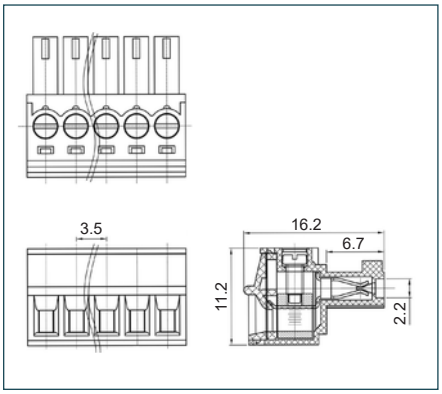

Female vertical connector (standard)

PART NO.	POLES	LENGTH
CTBP92VD/2S	2	7.8mm
CTBP92VD/3S	3	11.3mm
CTBP92VD/4S	4	14.8mm
CTBP92VD/5S	5	18.3mm
CTBP92VD/6S	6	21.8mm
CTBP92VD/7S	7	25.3mm
CTBP92VD/8S	8	28.8mm
CTBP92VD/9S	9	32.3mm
CTBP92VD/10S	10	35.8mm
CTBP92VD/11S	11	39.3mm
CTBP92VD/12S	12	42.8mm

CTBP92VD S



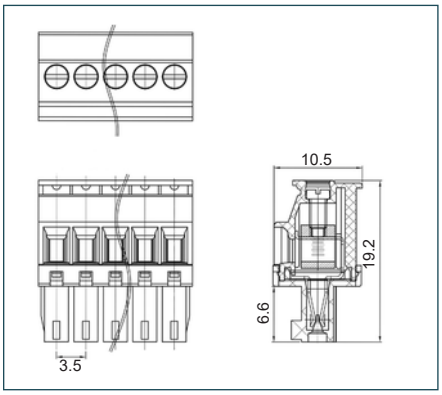

Female vertical connector (reversed)

PART NO.	POLES	LENGTH
CTBP92VD/2R	2	7.8mm
CTBP92VD/3R	3	11.3mm
CTBP92VD/4R	4	14.8mm
CTBP92VD/5R	5	18.3mm
CTBP92VD/6R	6	21.8mm
CTBP92VD/7R	7	25.3mm
CTBP92VD/8R	8	28.8mm
CTBP92VD/9R	9	32.3mm
CTBP92VD/10R	10	35.8mm
CTBP92VD/11R	11	39.3mm
CTBP92VD/12R	12	42.8mm

CTBP92VD R



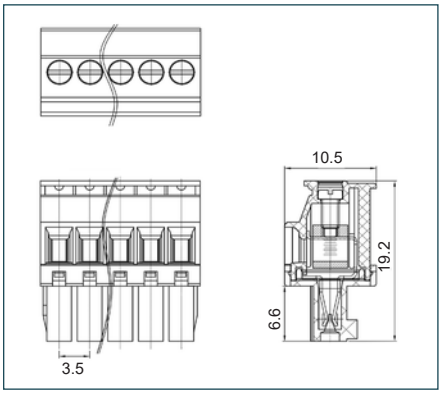

+44 (0)1638 716101 | sales@camdenboss.com | www.camdenboss.com

We operate a constant improvement policy, our products are subject to change without notice.

Vers 1

bsi ISO 9001 Quality Management Systems CERTIFIED FM 28614

PCB mounting male horizontal connector (closed ended)

PART NO.	POLES	LENGTH
CTBP93HD/2	2	8.4mm
CTBP93HD/3	3	11.9mm
CTBP93HD/4	4	15.4mm
CTBP93HD/5	5	18.9mm
CTBP93HD/6	6	22.4mm
CTBP93HD/7	7	25.9mm
CTBP93HD/8	8	29.4mm
CTBP93HD/9	9	32.9mm
CTBP93HD/10	10	36.4mm
CTBP93HD/11	11	39.9mm
CTBP93HD/12	12	43.4mm

CTBP93HD



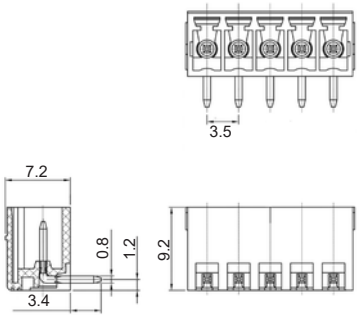

PCB mounting male vertical connector (closed ended)

PART NO.	POLES	LENGTH
CTBP93VD/2	2	8.4mm
CTBP93VD/3	3	11.9mm
CTBP93VD/4	4	15.4mm
CTBP93VD/5	5	18.9mm
CTBP93VD/6	6	22.4mm
CTBP93VD/7	7	25.9mm
CTBP93VD/8	8	29.4mm
CTBP93VD/9	9	32.9mm
CTBP93VD/10	10	36.4mm
CTBP93VD/11	11	39.9mm
CTBP93VD/12	12	43.4mm

CTBP93VD



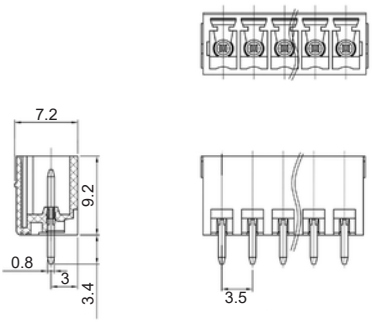

ASSOCIATED PRODUCTS

CTB92HD, CTB92VD S and CTBP92VD R can be replaced with a screwless type terminal block for a reduced assembly time.

CSTBP92HD - page 77

bsi ISO 9001 Quality Management Systems CERTIFIED FM 28614