Configuration documentation
Pneumatic cylinder

Type code	PRA-DA-040-0700-0322111100000000000000-B
Material number	0822121031



Description

Series	**PRA**	Profile cylinder - series PRA
Piston diameter	**040**	Piston diameter 40
Stroke	**0700**	Stroke in mm
Threads	**0**	ISO Threads
Tube	**3**	Advanced Profile: sensors on 4 sides
Cushioning	**2**	Pneumatic cushioning
Piston	**2**	Piston with magnet
Piston rod	**1**	Single
Sealings	**1**	Standard
Scraper	**1**	Scraper - standard
Corrosion protection	**1**	Standard
Piston rod extension	**000**	Without piston rod extension
ATEX	**000**	Without ATEX
Trunnion mounting	**0**	Without trunnion mounting
Position trunnion mounting	**0000**	
End covers	**0**	End covers without surface treatment
Port position		
Port position front	**0**	0° (12h)
Port position rear	**0**	0° (12h)
Accessories		
Piston rod mountings	**000**	No mounting
Mounting at front cover	**000**	No mounting at front cover
Mounting orientation front	**00**	Without mounting
Mounting at rear cover	**000**	No mounting at rear cover
Mounting orientation rear	**00**	Without mounting
Counter bearing	**000**	No counter bearing
Guide units	**000**	No guiding unit, no locking element
Sensor type	**000**	Without Sensor
Sensor position	**00**	Without sensor position
Fittings front	**000**	Front cover - without fitting
Fittings rear	**000**	Rear cover - without fitting

Note:
A specific part number is required for ordering and clearly identifying the configured product. If the part number is not shown under the type code, please save your configuration under "Save project".

Technical data

Operating temperature	**-20°C to 80°C**

Type code	PRA-DA-040-0700-0322111100000000000000-B
Material number	0822121031

Spare parts

Piston rod	**R480963191**	PISTON ROD 040-0700-0-2-1-1-1
Tube		TUBE PRA-040-0700-0-1-1
Spare part kit - standard (for cylinder since 2014)	**R413000899**	SPARE PART KIT PRA/TRB-040-ST

Type code	PRA-DA-040-0700-0322111100000000000000-B
Material number	0822121031



Please click on the image to activate the 3D model.
We are not liable for this 3D model since it has been generated automatically.

© Alle Rechte bei AVENTICS S.a.r.l., auch für den Fall von Schutzrechtsanmeldungen. Jede Verfügungsbefugnis, wie Kopier- und Weitergaberecht, bei uns.

Pos.	Quantity	Material number	Designation	Type code
1	1	0822121031	Base cylinder	PRA-DA-040-0700-0322111100000000000000-B

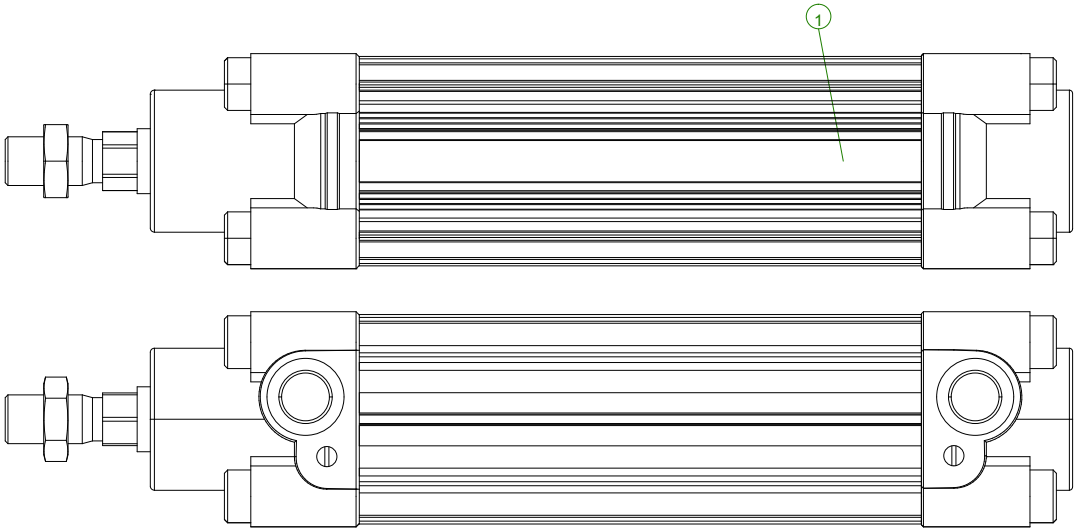

Note:
Stroke length not to scale.
For this drawing non-warranty exists, because it is build automatically.

Ind.	Change/Aend.	Datum / Date	Drawn/Gez.	Checked/Gepr.	Releas./Freig.	BWN	Resp. dept/ Verantw. Abt.	Add info / Zus. Info
AA	No changes	2008-12-12	Cylinder			-	-	

Lang/Spr.	Syst.	Weight/Gew.	Scale/M.stab
EN		kg	--

AVENTICS

OFFER DRAWING
ANGEBOTS-ZEICHN.

PRA-DA-040-0700-0322111100000000000000-B

Sheet/Bl. 1 / 1

Doc. type		PD/TD	Ind.	Format
MTA	0822121031 - ZUZ	001	AA	A3

Repl. for | Repl. by

© This Document, as well as the data, specifications and other informations set forth in it, are the exclusive property of AVENTICS S.a.r.l. Without their consent it may not be reproduced or given to third parties.

Aenderungen nur mit CAD zulaessig | Revisions only permitted by CAD

© Alle Rechte bei AVENTICS S.a.r.l., auch fuer den Fall von Schutzrechtsanmeldungen. Jede Verfuegungsbefugnis, wie Kopier- und Weitergaberecht, bei uns.

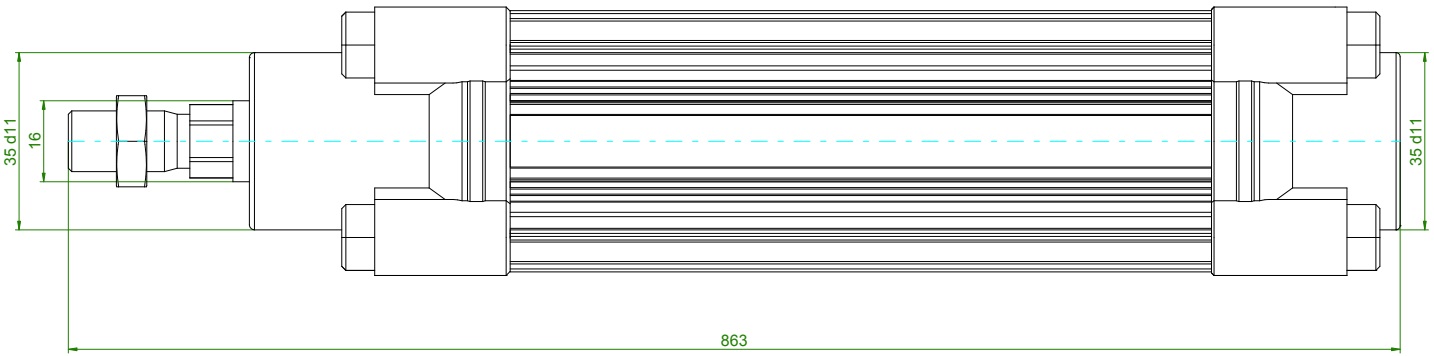

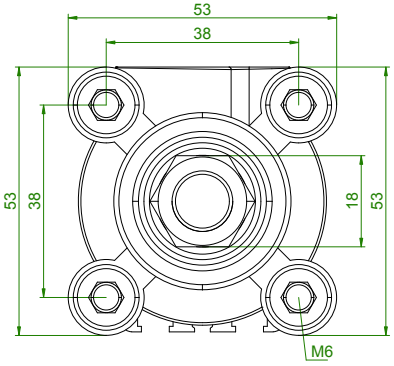

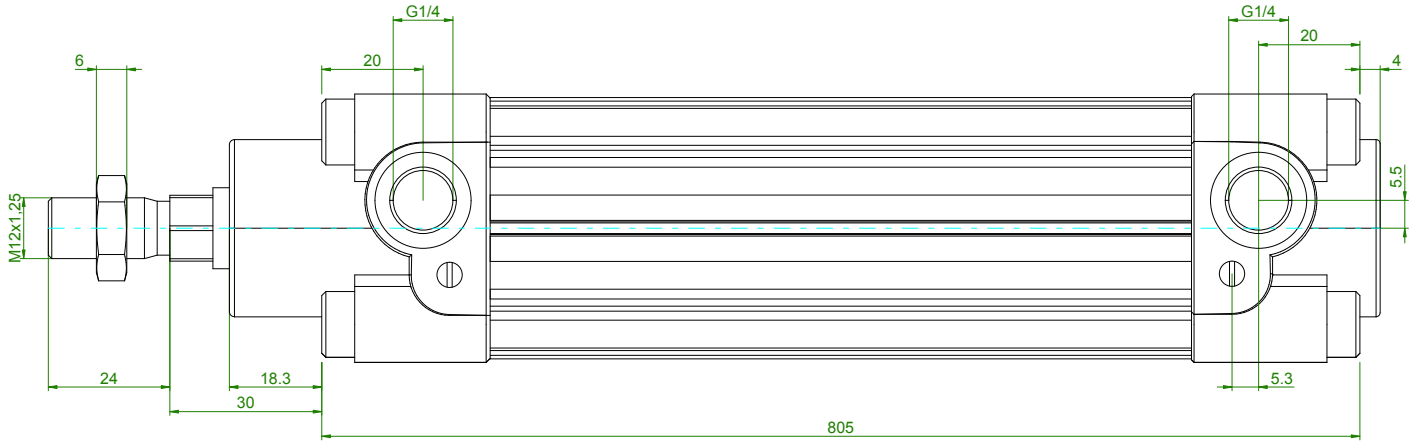

Note:
Stroke length not to scale.
For this drawing non-warranty exists, because it is build automatically.
Dimensions not shown, see technical documentation
Dimensions in mm

Ind.	Change/Aend.	Datum / Date	Drawn/Gez.	Checked/Gepr.	Releas./Freig.	BWN	Resp. dept/ Verantw. Abt.	Add info / Zus. Info
AA	No changes	2008-12-12	Cylinder			-	-	

Lang/Spr.	Syst.	Weight/Gew.	Scale/M.stab
EN		kg	--

AVENTICS

OFFER DRAWING
ANGEBOTS-ZEICHN.

PRA-DA-040-0700-0322111100000000000000-B

Sheet/Bl. 1 / 1

Doc. type		PD/TD	Ind.	Format
MCC	0822121031 - AGZ	001	AA	A3

Repl. for | Repl. by

© This Document, as well as the data, specifications and other informations set forth in it, are the exclusive property of AVENTICS S.a.r.l. Without their consent it may not be reproduced or given to third parties.

Aenderungen nur mit CAD zulaessig

Revisions only permitted by CAD