E20884

Mounting set for photoelectric sensors

SYSTEM COMPONENT OU BOLT

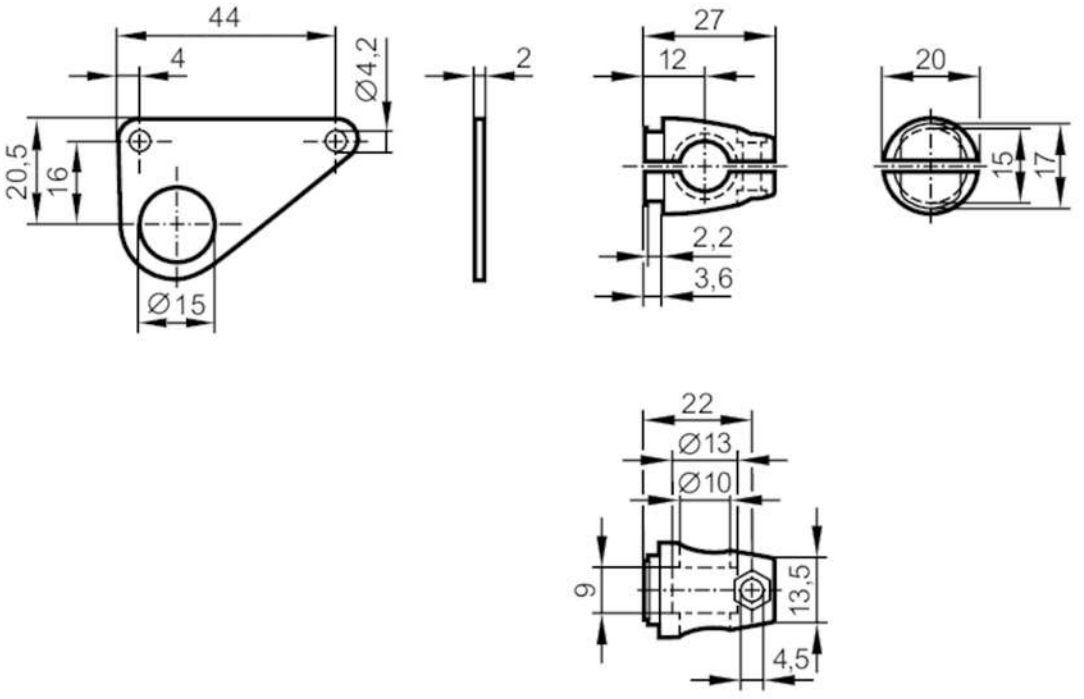

Application		
Design		clamp mounting
Mechanical data		
Weight	[g]	97.5
Type of mounting		free-standing; (M8)
Materials		fixture: stainless steel (1.4571/316Ti); Clamp: stainless steel (1.4408)
Accessories		
Items supplied		screw: 1 x M8 x 40
Remarks		
Pack quantity		1 pcs.