

Dimensions

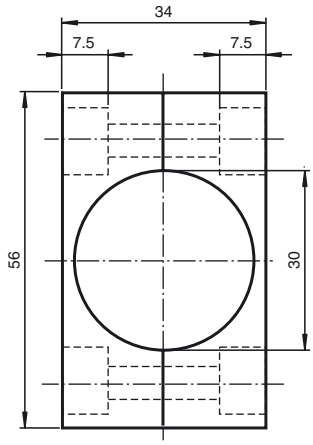

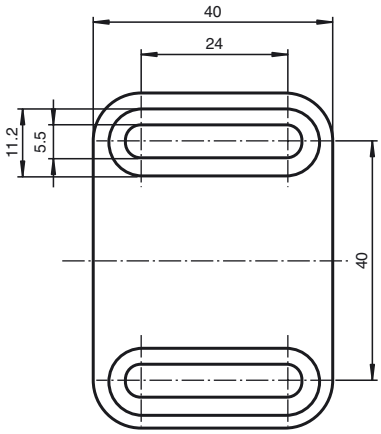

Technical data

General specifications	
Inside diameter	30 mm
Ambient conditions	
Ambient temperature	-25 ... 85 °C (-13 ... 185 °F)
Mechanical specifications	
Material	Base: Crastin/PBT (green) Upper section: PA (transparent)
Tightening torque, fastening screws	≤ 1.5 Nm
Dimensions	40 mm x 56 mm x 36 mm

Model Number

BF 30

Mounting flange, 30 mm

Features

- Retainer for all cylindrical sensors with M30 thread
- Simple installation and exact setting
- Large sensing range (max. 18 mm)

Release date: 2015-02-17 14:55 Date of issue: 2015-02-17 000051_eng.xml