Brand of NTN corporation

Technical data

UCFLE210

Bearing units



Grey cast housing, radial insert ball bearing with socket set screws,seal with slinger

KIT CONTENT

UC210G2, FLE210

VISUAL (S)

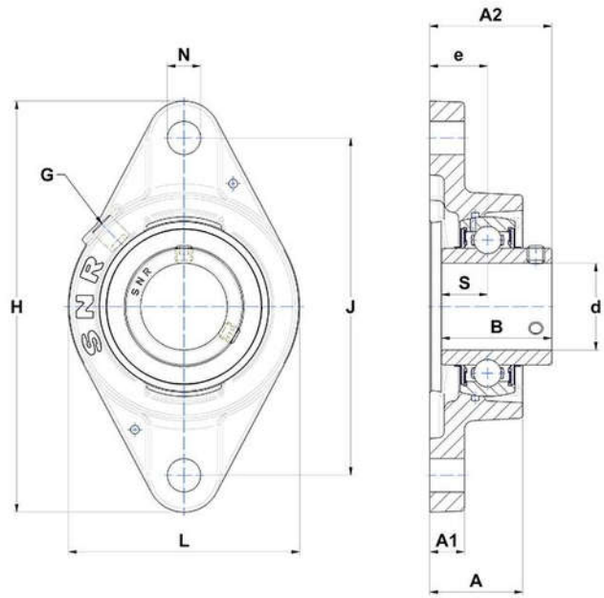

PRODUCT DEFINITION

Brand	SNR
A - Housing height	41,6 mm
A1 - Housing foot height / flange height	13 mm
A2 - Total height from mounting surface	60,6 mm
B - Width of Inner Ring	51,6 mm
d - Shaft diameter	50 mm

PRODUCT DEFINITION	
e - Distance mounting surface to bearing center	28 mm
G - Grease fitting	R1/8"
H - Housing length, width or diameter	190 mm
J - Mounting holes distance	157 mm
L - Housing width / diameter	116 mm
N - Mounting hole dimension	18 mm
S - Distance front side/bearing centre	19 mm

PRODUCT PERFORMANCE	
C - Dynamic load rating	35100000 mN
C0 - Static load rating	23200000 mN
Operating temperature min.	253,15 °K
Operating temperature max.	373,15 °K

OTHER FEATURES	
Mass	2,1 kg
Recommended tightening torque for set screw	22 N-m