182.72.104.6660..-2RSRRillenkugellager

Deep groove ball bearings

6013-2RSR (Series 60..-2RSR)

main dimensions to DIN 625-1, lip seals on both sides

The datasheet is only an overview of dimensions and basic load ratings of the selected product. Please always observe all the guidelines in these overview pages. Further information is given on many products under the menu item "Description". You can also order comprehensive information via the Catalogue selection system (https://www.schaeffler.de/content.schaeffler.de/en/news_media/index.jsp) or by telephone on +49 (91 32) 82 - 28 97.

d	65	mm	
D	100	mm	
B	18	mm	
d_1	76,2	mm	
D_2	91,5	mm	
$D_{a\ max}$	94	mm	
$d_{a\ min}$	71	mm	
$r_{a\ max}$	1	mm	
r_{min}	1,1	mm	
m	0,463	kg	Mass
C_r	32500	N	Basic dynamic load rating, radial
C_{0r}	25000	N	Basic static load rating, radial
n_G	3500	1/min	Limiting speed
C_{ur}	1270	N	Fatigue limit load, radial
f_0	15,7		Calculation factor

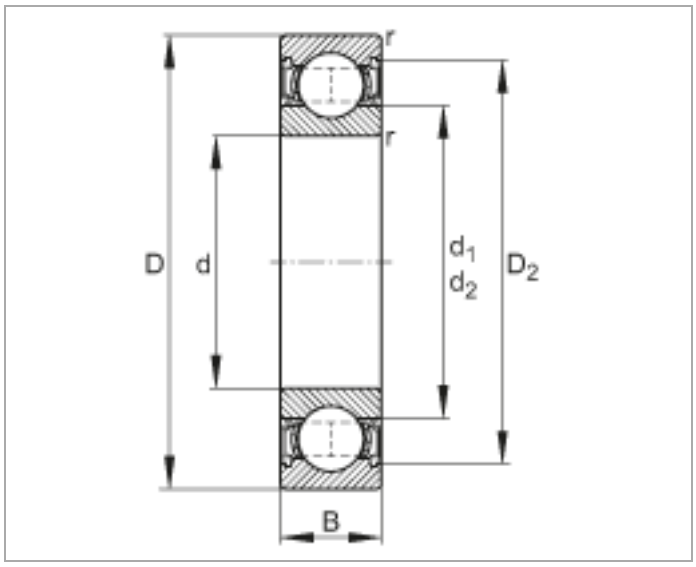
r
r
D
d
d1
d2
D2
B

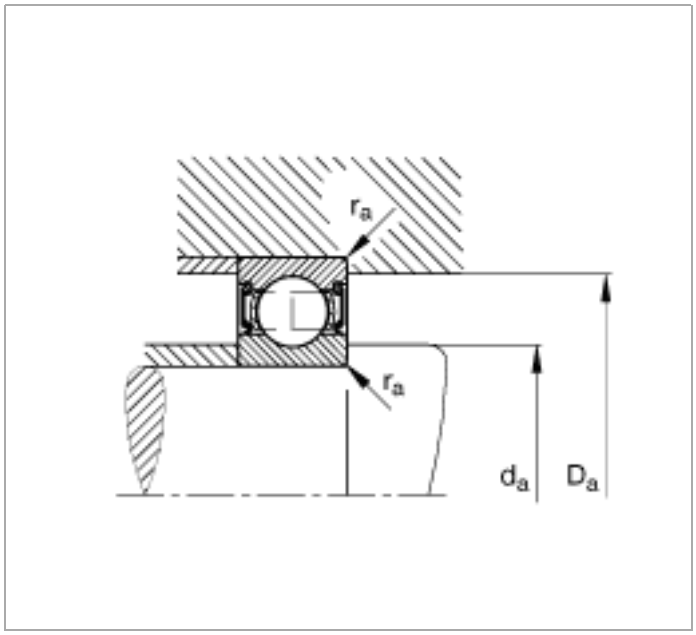
ra
ra
da
Da