Mounting plate, Series NL2-MBR-...-W01

- Steel



Weight	0,065 kg

Technical data

Part No.
1821336006

Scope of delivery incl. mounting screws

Technical information

Material	
Housing	Steel, galvanized

Dimensions

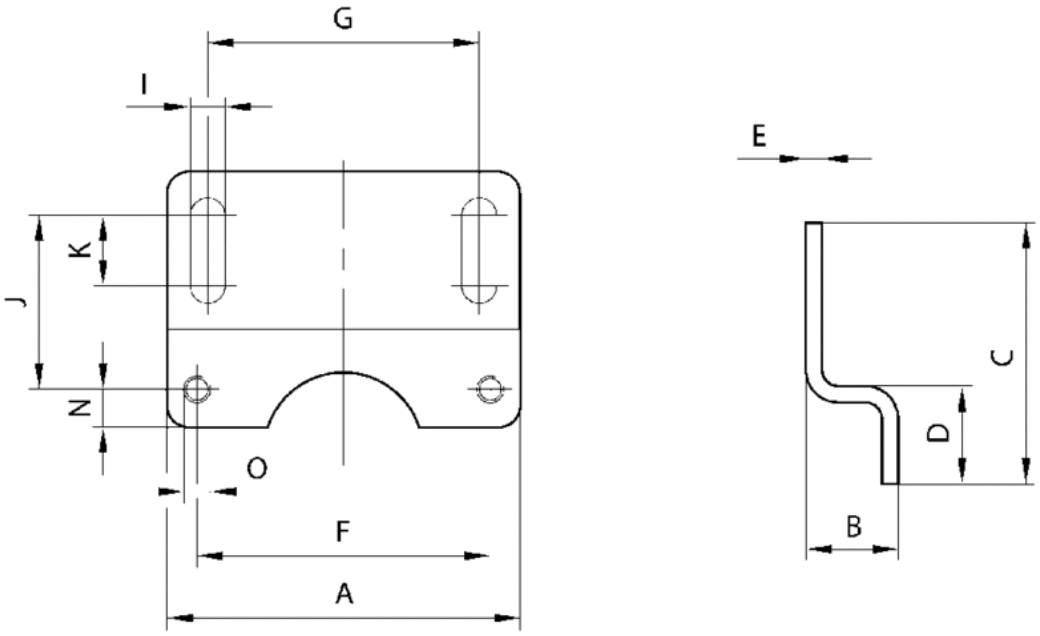

Dimensions

Part No.	A	B	C	D	E	F	G	I	J	K	N	O
1821336006	48	20	42	18	3	36	38	5.4	27.5	8	6	M4