OPERATING VOLTAGE	4–WIRE DC, 10–65 VDC, SOURCING CURRENT
OUTPUT FUNCTION	COMPLEMENTARY (ONE NORMALLY OPEN, ONE NORMALLY CLOSED)
EMBEDDABLE	NO
RATED OPERATING DISTANCE	75 mm
APPROVAL OR CERTIFICATION	CSA (C US), CE
SHORT–CIRCUIT PROTECTION	YES
WELD–FIELD IMMUNITY	YES
SWITCHING FREQUENCY	250 Hz
RIPPLE	≤10%
DIFFERENTIAL TRAVEL <HYSTERESIS>	3–15% (5% TYPICAL)
VOLTAGE DROP ACROSS CONDUCTING SENSOR	≤1.8 V AT 200 mA
TRIGGER CURRENT FOR OVERLOAD PROTECTION	≥220 mA
CONTINUOUS LOAD CURRENT	≤200 mA
OFF–STATE <LEAKAGE> CURRENT	≤10 µA
NO LOAD CURRENT	8–13 mA
TIME DELAY BEFORE AVAILABILITY	≤4–8 ms
POWER–ON EFFECT	PER IEC 947–5–2
REVERSE–POLARITY PROTECTION	INCORPORATED
WIRE–BREAK PROTECTION	INCORPORATED
TRANSIENT PROTECTION	PER EN 60947–5–2
OPERATING TEMPERATURE <10% DRIFT>	–25°C TO +70°C (–13°F TO + 158°F)
OPERATING TEMPERATURE <15% DRIFT>	–30°C TO +85°C (–22°F TO + 185°F)
SHOCK	30 g, 11 ms
VIBRATION	55 Hz, 1 mm AMPLITUDE (ALL 3 PLANES)
REPEATABILITY	≤2% OF RATED OPERATING DISTANCE
NUMBER OF LEDS	2
LED FUNCTION <YELLOW>	OUTPUT ENERGIZED
LED FUNCTION <GREEN>	POWER ON
LED FUNCTION <FLASHING GREEN>	SHORT–CIRCUIT INDICATION
ENCLOSURE	MEETS NEMA 1,3,4,6,13, AND IEC IP 67
CONNECTION	½–14 NPT CONDUIT FITTING
HOUSING MATERIAL	PBT–GF30–V0 PLASTIC
TERMINAL CHAMBER COVER MATERIAL	TROGAMID T

C US

Uprox

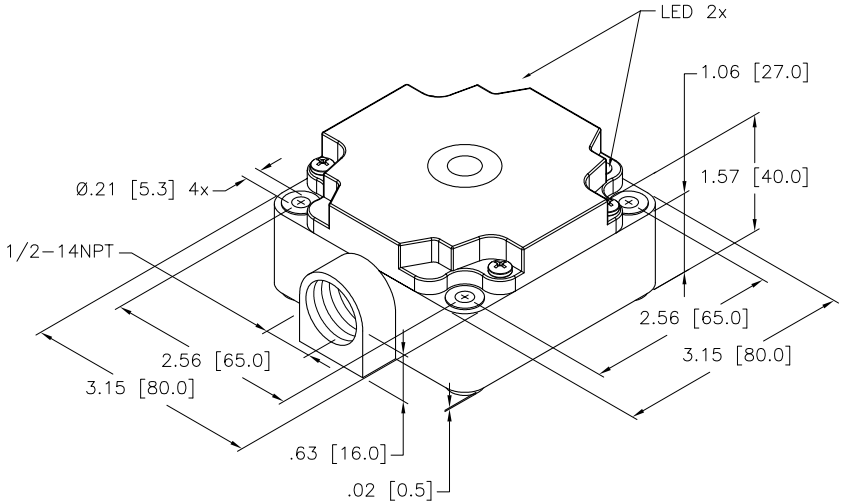

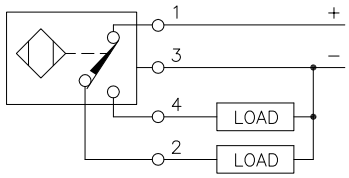

SOURCE DRAWING - FOR REFERENCE ONLY

NOTE: ALL DIMENSIONAL TOLERANCES ±1.0 mm.

REV	DESCRIPTION	BY	DATE	ECO NO.
C	UPDATE HOUSING STYLE	CBM	09/13/00	B3890

RELATED DOCUMENTS
1.
2.
3.
4.

3RD ANGLE PROJECTION

THIS DRAWING IS PROPERTY OF TURCK INC. USE OF THIS DOCUMENT WITHOUT WRITTEN PERMISSION IS PROHIBITED.

TURCK INC
High Technology Sensors and Automation Controls
3000 CAMPUS DRIVE
MINNEAPOLIS, MN 55441
1–800–544–7769
(763) 553–7300
(763) 553–0708 fax
turck.com

MATERIAL

FINISH

ALL DIMENSIONS DISPLAYED ON THIS DRAWING ARE FOR REFERENCE ONLY

CONTACT TURCK FOR MORE INFORMATION

DRFT CBM | DATE 09/13/00
DSGN | SCALE NONE

UNIT OF MEASUREMENT
INCH [MILLIMETER]
DO NOT SCALE THIS DRAWING

DESCRIPTION
Ni75U–CP80–VP4X2

IDENTIFICATION NO. M1540801 | REV C

FILE: M1540801 | SHEET 1 OF 1