

Image may differ from product. See technical specification for details.

# GEH 40 TXE-2LS

## Radial spherical plain bearing, maintenance-free, metric sizes

Radial spherical plain bearings are designed to accommodate radial and combined radial and axial loads, and also misalignment. This specific design includes a steel/PTFE fabric sliding contact surface combination and the bearings are maintenance-free. Except for those with designation suffix TXGR, they have a double-lip contact seal (-2RS) or a triple-

lip, heavy duty contact seal (-2LS) on both sides. Those with designation suffixes TXGR, TXG3E or TXG3A are made of stainless steel.

- Designed for radial and combined radial and axial loads
- Long service life and maintenance-free
- Suitable for very heavy, constant direction loads
- Low coefficient of friction

# Overview

## Dimensions

| | |
|---|---|
| Bore diameter | 40 mm |
| Outside diameter | 68 mm |
| Width, inner ring | 40 mm |
| Width, outer ring | 25 mm |

## Performance

| | |
|---|---|
| Basic dynamic load rating | 360 kN |
| Basic static load rating | 600 kN |

## Properties

| | |
|---|---|
| Sliding contact surface combination | Steel/PTFE fabric |
| Material, inner ring | Bearing steel |
| Material, outer ring | Bearing steel |
| Maintenance | Maintenance-free |
| Sealing | Seal on both sides |
| Sealing type | Triple-lip |
| Relubrication feature | Without |

## Logistics

| | |
|---|---|
| Product net weight | 0.52 kg |
| eClass code | 23-05-01-06 |
| UNSPSC code | 31171515 |

## Technical specification

| | |
|---|---|
| Maintenance | Maintenance-free |
| Sliding contact surface combination | Steel/PTFE fabric |
| Material, inner ring | Bearing steel |
| Material, outer ring | Bearing steel |
| Sealing | Seal on both sides |
| Sealing type | Triple-lip |

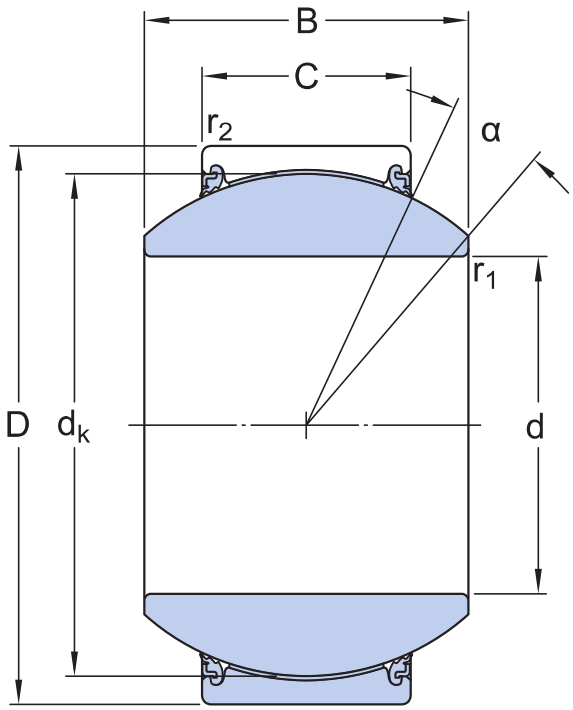


## Dimensions

| | | |
|---|---|---|
| d | 40 mm | Bore diameter |
| D | 68 mm | Outside diameter |
| B | 40 mm | Width |
| C | 25 mm | Width outer ring |
| α | 17 ° | Angle of tilt |
| $d_k$ | 60 mm | Raceway diameter inner ring |
| $r_1$ | min. 0.6 mm | Chamfer dimension bore |
| $r_2$ | min. 1 mm | Chamfer dimension outer ring |

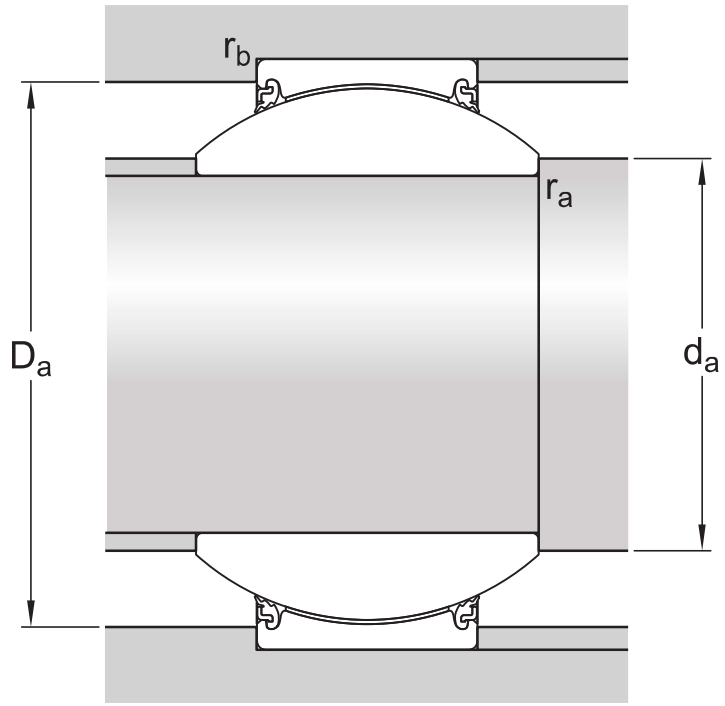


## Abutment dimensions

| | | |
|---|---|---|
| $d_a$ | min. 44.2 mm | Abutment diameter shaft |
| $d_a$ | max. 44.7 mm | Abutment diameter shaft |
| $D_a$ | min. 61 mm | Abutment diameter housing |
| $D_a$ | max. 63.5 mm | Abutment diameter housing |
| $r_a$ | max. 0.6 mm | Fillet radius shaft |
| $r_b$ | max. 1 mm | Fillet radius housing |

## Calculation data

| | | |
|---|---|---|
| Basic dynamic load rating | C | 360 kN |
| Basic static load rating | $C_0$ | 600 kN |
| Specific dynamic load factor | K | 300 N/mm² |
| Specific static load factor | $K_0$ | 500 N/mm² |

## Tolerances and clearances

- General bearing specifications

## RADIAL LOCATION OF BEARINGS

- Recommended fits

## More Information

### Product details

- Radial spherical plain bearings requiring maintenance
- Maintenance-free radial spherical plain bearings
- General bearing specifications
- Temperature limits

### Engineering information

- Principles of selection

### Tools

- SKF Product select
- Heater selection tool

# Terms of use

By accessing and using this website / app owned and published by AB SKF (publ.) (556007-3495 · Gothenburg) (“SKF”), you agree to the following terms and conditions:

**Warranty Disclaimer and Limitation of Liability**
Although every care has been taken to assure the accuracy of the information on this website / app, SKF provides this information "AS IS" and DISCLAIMS ALL WARRANTIES, EXPRESS OR IMPLIED, INCLUDING, BUT NOT LIMITED TO, IMPLIED WARRANTIES OF MERCHANTABILITY AND FITNESS FOR A PARTICULAR PURPOSE. You acknowledge that your use of this website / app is at your sole risk, that you assume full responsibility for all costs associated with use of this website / app, and that SKF shall not be liable for any direct, incidental, consequential, or indirect damages of any kind arising out of your access to, or use of the information or software made available on this website / app.

Any warranties and representations in this website / app for SKF products or services that you purchase or use will be subject to the agreed upon terms and conditions in the contract for such product or service.

Further, for non-SKF websites / apps that are referenced in our website / app or where a hyperlink appears, SKF makes no warranties concerning the accuracy or reliability of the information in these websites / apps and assumes no responsibility for material created or published by third parties contained therein. In addition, SKF does not warrant that this website / app or these other linked websites / apps are free from viruses or other harmful elements.

**Third Party Services**
When viewing YouTube content via the SKF website(s) (i.e. using YouTube API Services), you agree to be bound by the YouTube Terms of Service.

**Copyright**
Copyright in this website / app copyright of the information and software made available on this website / app rest with SKF or its licensors. All rights are reserved. All licensed material will reference the licensor that has granted SKF the right to use the material. The information and software made available on this website / app may not be reproduced, duplicated, copied, transferred, distributed, stored, modified, downloaded or otherwise exploited for any commercial use without the prior written approval of SKF. However, it may be reproduced, stored and downloaded for use by individuals without prior written approval of SKF. Under no circumstances may this information or software be supplied to third parties.

This website /app includes certain images used under license from Shutterstock, Inc.

**Trademarks and Patents**
All trademarks, brand names, and corporate logos displayed on the website / app are the property of SKF or its licensors, and may not be used in any way without prior written approval by SKF. All licensed trademarks published on this website / app reference the licensor that has granted SKF the right to use the trademark. Access to this website / app does not grant to the user any license under any patents owned by or licensed to SKF.

**Changes**
SKF reserves the right to make changes or additions to this website / app at any time.