JUMO GmbH & Co. KG
Delivery address: Mackenrodtstraße 14
36039 Fulda, Germany
Postal address: 36035 Fulda, Germany
Phone: +49 661 6003-0
Fax: +49 661 6003-607
Email: mail@jumo.net
Internet: www.jumo.net

JUMO Instrument Co. Ltd.
JUMO House
Temple Bank, Riverway
Harlow, Essex, CM20 2DY, UK
Phone: +44 1279 63 55 33
Fax: +44 1279 62 50 29
Email: sales@jumo.co.uk
Internet: www.jumo.co.uk

JUMO Process Control, Inc.
6733 Myers Road
East Syracuse, NY 13057, USA
Phone: +1 315 437 5866
Fax: +1 315 437 5860
Email: info.us@jumo.net
Internet: www.jumousa.com

Fittings for Membrane-Covered Sensors

202811/10 — Combination fitting
202811/20 — Flow monitor for disinfection measurands
202811/30 — Individual fitting for membrane-covered sensors

General information

According to data sheets 202630 to 202637 for measurands of water disinfectant and water treatment (e.g. free chlorine and total chlorine, chlorine dioxide, ozone, hydrogen peroxide, and peracetic acid), membrane-covered sensors must have fittings for correct operation and as an option can also be monitored for correct inflow velocity.

Combination fitting (type 202811/10...)

The compact combination fitting can hold several electro-chemical sensors and is typically used for disinfection monitoring of drinking and bathwater as well as slightly polluted process and cooling water. The sensors are easily visible through the fitting's crystal-clear design and can be visually inspected for pollutants.

Flow monitor (type 202811/20...)

The flow monitor monitors the minimum inflow when using membrane-covered sensors and is recommended as an extension to the individual fitting 202811/30...

Individual fitting (type 202811/30...)

The individual fitting is intended to hold an individual membrane-covered sensor. Besides the slot for the sensor, the fitting also has a ground pin to discharge any parasitic currents.



Type 202811/10...



Type 202811/20...



Type 202811/30...

JUMO GmbH & Co. KG
Delivery address: Mackenrodtstraße 14
36039 Fulda, Germany
Postal address: 36035 Fulda, Germany
Phone: +49 661 6003-0
Fax: +49 661 6003-607
Email: mail@jumo.net
Internet: www.jumo.net

JUMO Instrument Co. Ltd.
JUMO House
Temple Bank, Riverway
Harlow, Essex, CM20 2DY, UK
Phone: +44 1279 63 55 33
Fax: +44 1279 62 50 29
Email: sales@jumo.co.uk
Internet: www.jumo.co.uk

JUMO Process Control, Inc.
6733 Myers Road
East Syracuse, NY 13057, USA
Phone: +1 315 437 5866
Fax: +1 315 437 5860
Email: info.us@jumo.net
Internet: www.jumousa.com

Combination fitting (type 202811/10)

Brief description

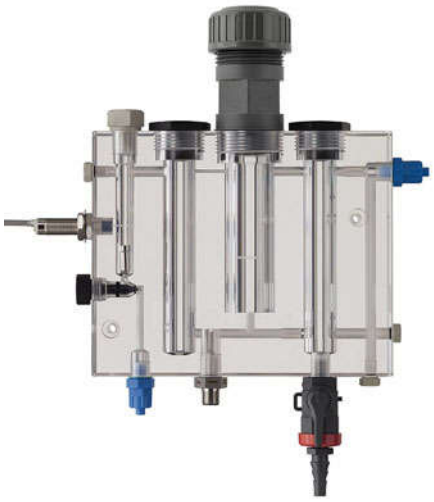

Type 202811/10...

The combination fitting type 202811/10... is intended to hold several electrochemical sensors. Typical use includes disinfection monitoring of drinking and bathwater as well as slightly polluted process and cooling water. With its compact design type, the fitting allows for a space-saving combination of several sensors and is usually used in a bypass or downstream of a tap on the main line. The sensors are easily visible through the fitting's crystal-clear design and can be visually inspected for pollutants.

In the maximum version, 2 sensors with Pg 13.5 thread (e.g. for pH value and Redox), 1 membrane-covered sensor Ø 25 mm for disinfection check (e.g. for free chlorine, chlorine dioxide) as well as a temperature probe with M14 x 1.5 thread. Furthermore, in the measuring water inflow, there is flow monitor according to the floating body principle with an inductive proximity switch. This acts to monitor a sufficient and constant inflow of the membrane-covered sensor. A ground pin can also be installed to discharge any electrostatic charges.

The water flows in and out of the fitting through plug-in connections for hoses with an inner diameter of Ø 6 mm. The flow velocity can be adjusted as required using the needle valve.

Thanks to the adept arrangement of the sensors and flow channels, bubble-free operation of the sensors is virtually possible. The accumulation of air that can lead to distorted measured values is prevented. Unnecessary slots can be blocked before startup by the blanking plugs contained in the scope of delivery.

In order to facilitate sampling for calibration (for free chlorine, for instance), it is possible to extend the combination fitting with a mini ball valve.

Typically, the full set of features for a drinking or bathwater measuring point consists of pH and Redox sensors (Pg 13.5, insertion length 120 mm), membrane-covered sensors for free chlorine, temperature probe, ground pin, and flow monitor.

Flow monitor, temperature probe, and ground pin can be obtained with the fitting when placing the order (seechapter "Order details", page 12) and easily fitted by the user. The electrochemical sensors (e.g. pH, Redox, free chlorine) must be ordered separately.

Areas of application

- Disinfection monitoring of drinking and bathwater
- Monitoring of slightly polluted process and cooling water

JUMO GmbH & Co. KG
Delivery address: Mackenrodtstraße 14
36039 Fulda, Germany
Postal address: 36035 Fulda, Germany
Phone: +49 661 6003-0
Fax: +49 661 6003-607
Email: mail@jumo.net
Internet: www.jumo.net

JUMO Instrument Co. Ltd.
JUMO House
Temple Bank, Riverway
Harlow, Essex, CM20 2DY, UK
Phone: +44 1279 63 55 33
Fax: +44 1279 62 50 29
Email: sales@jumo.co.uk
Internet: www.jumo.co.uk

JUMO Process Control, Inc.
6733 Myers Road
East Syracuse, NY 13057, USA
Phone: +1 315 437 5866
Fax: +1 315 437 5860
Email: info.us@jumo.net
Internet: www.jumousa.com

Technical data

Materials	Mounting block: PMMA GS Screw connections: POM, PP, PPO, PVC Temperature probe: Stainless steel 1.4571 Floating body: Stainless steel 1.4571 Ground pin: Stainless steel 1.4571
Admissible medium temperature	0 to +60 °C Deviating temperature ranges must be taken into account for the sensors utilized
Admissible process pressure at +60 °C	4 bar 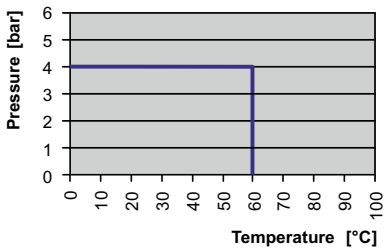 Deviating pressure ranges must be taken into account for the sensors utilized
Sensor mountings	Two mountings for sensors with a Pg 13.5 thread, insertion length of 120 mm One mounting for membrane-covered sensors with a dia. of 25 mm One mounting for temperature probes with a M14 x 1.5 thread, max. insertion length of 30 mm One mounting for inductive proximity sensor with a M12 x 1 thread
Process connection	G1/4 screw connections for 6 × 8 hose (inner dia. 6 mm, outer dia. 8 mm)
Weight	Approx. 1820 g (with series accessory, without sensors)

Inductive proximity sensor

Circuit diagram	Switching contact = NPN N/O contact (illustration = minimum inflow velocity not reached) 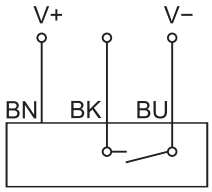
Operating voltage	DC 5 to 36 V
Current consumption without load	< 10 mA
Ampacity	200 mA
Voltage drop	< 1.5 V
Protection type	IP67

Temperature probe

Connection for M12 machine connector	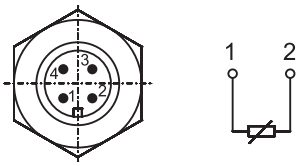
Protection type	IP 67 when plugged in

JUMO GmbH & Co. KG
Delivery address: Mackenrodtstraße 14
36039 Fulda, Germany
Postal address: 36035 Fulda, Germany
Phone: +49 661 6003-0
Fax: +49 661 6003-607
Email: mail@jumo.net
Internet: www.jumo.net

JUMO Instrument Co. Ltd.
JUMO House
Temple Bank, Riverway
Harlow, Essex, CM20 2DY, UK
Phone: +44 1279 63 55 33
Fax: +44 1279 62 50 29
Email: sales@jumo.co.uk
Internet: www.jumo.co.uk

JUMO Process Control, Inc.
6733 Myers Road
East Syracuse, NY 13057, USA
Phone: +1 315 437 5866
Fax: +1 315 437 5860
Email: info.us@jumo.net
Internet: www.jumousa.com

Dimensions

Combination fitting

Type 202811/10...

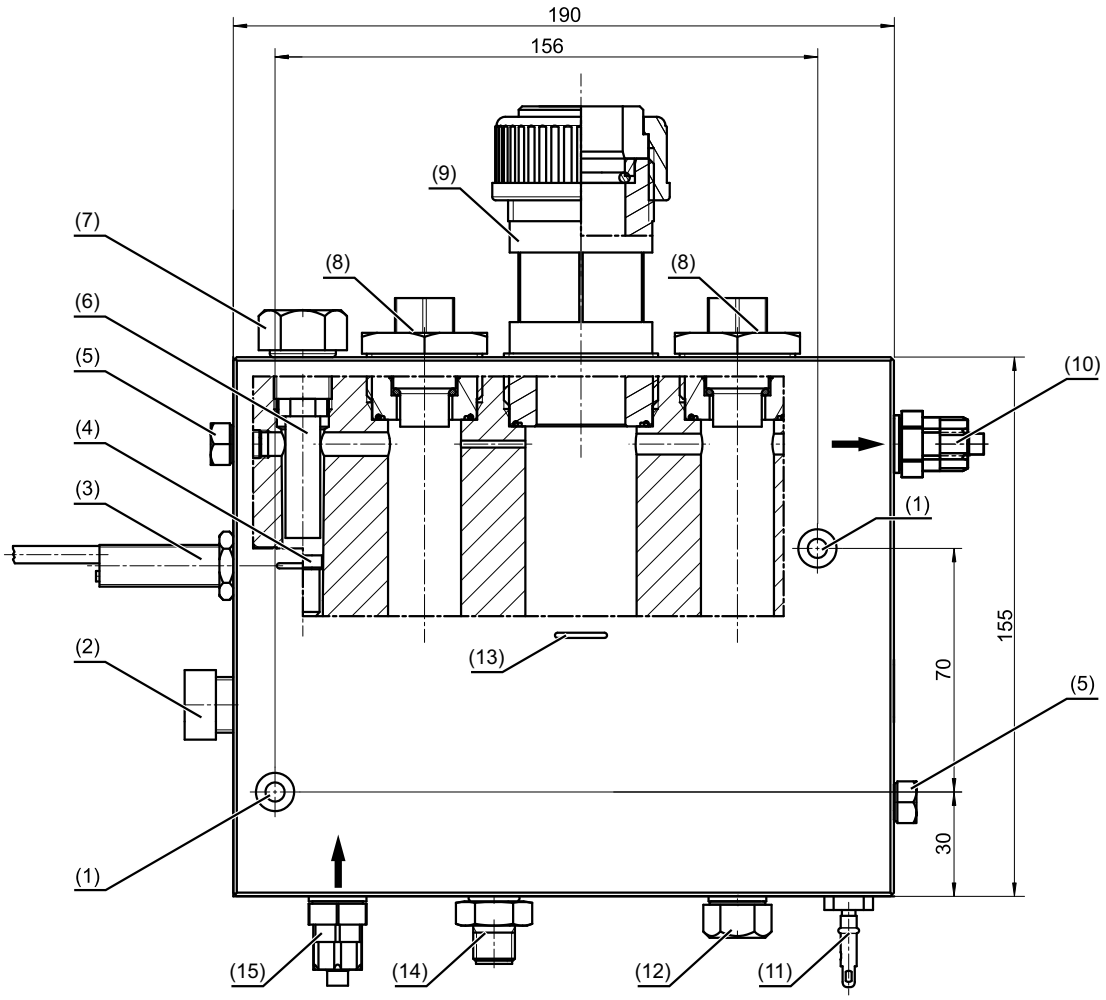

(1) Mounting hole for M5 fastening screws
(2) Valve insert for flow control
(3) Inductive proximity sensor[a](Flow monitoring), M12 x 1 thread
(4) Floating body of the flow monitor
(5) M8 sealing screw
(6) Extension for M8 sealing screw
(7) G 3/8 sealing screw
(8) Mount sealed with dummy plug for pH/Redox sensor with Pg 13.5 thread
(9) Mount for membrane-covered sensor with 25 mm diameter
(10) Hose connection for measuring water outflow, connection to G 1/4 fitting, for 6 × 8 tube (inner dia. 6 mm, outer dia. 8 mm)
(11) M8[a] ground rod
(12) G 1/4 sealing screw (opening for optional mini ball valve for sampling)
(13) Indicator for sensor immersion depth
(14) Temperature probe[a]
(15) Threaded hose connection for measuring water inflow, G 1/4 connection on fitting side, for 6 × 8 hose (inner dia. 6 mm, outer dia. 8 mm)

[a] Optional.

JUMO GmbH & Co. KG
Delivery address: Mackenrodtstraße 14
36039 Fulda, Germany
Postal address: 36035 Fulda, Germany
Phone: +49 661 6003-0
Fax: +49 661 6003-607
Email: mail@jumo.net
Internet: www.jumo.net

JUMO Instrument Co. Ltd.
JUMO House
Temple Bank, Riverway
Harlow, Essex, CM20 2DY, UK
Phone: +44 1279 63 55 33
Fax: +44 1279 62 50 29
Email: sales@jumo.co.uk
Internet: www.jumo.co.uk

JUMO Process Control, Inc.
6733 Myers Road
East Syracuse, NY 13057, USA
Phone: +1 315 437 5866
Fax: +1 315 437 5860
Email: info.us@jumo.net
Internet: www.jumousa.com

Accessories

Mini ball valve made from PVC for combination fitting type 202811/10... for sampling.

For installation location see Pos. 11 inchapter "Dimensions", page 4

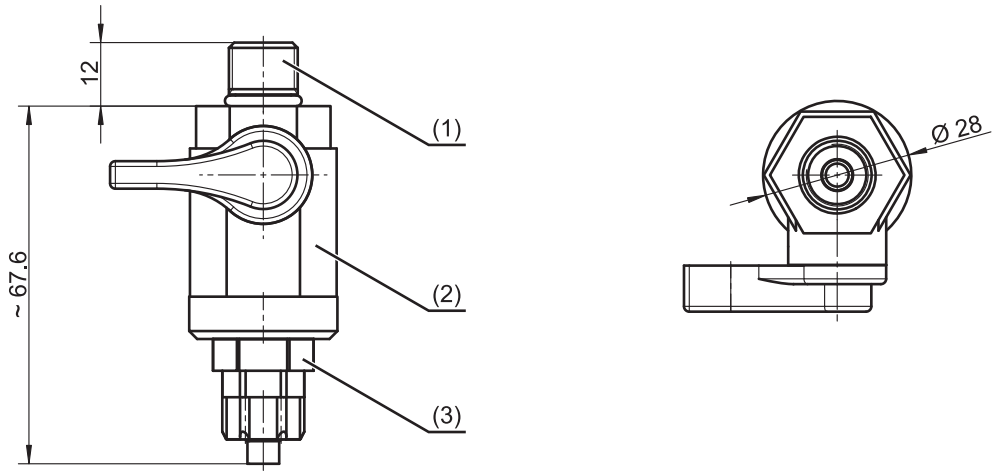

(1) Connection thread G 1/4
(2) Mini ball valve made from PVC, part no. 00402210
(3) Hose connection for hose 6 × 8 (inner Ø 6 mm, outer Ø 8 mm)

JUMO GmbH & Co. KG
Delivery address: Mackenrodtstraße 14
36039 Fulda, Germany
Postal address: 36035 Fulda, Germany
Phone: +49 661 6003-0
Fax: +49 661 6003-607
Email: mail@jumo.net
Internet: www.jumo.net

JUMO Instrument Co. Ltd.
JUMO House
Temple Bank, Riverway
Harlow, Essex, CM20 2DY, UK
Phone: +44 1279 63 55 33
Fax: +44 1279 62 50 29
Email: sales@jumo.co.uk
Internet: www.jumo.co.uk

JUMO Process Control, Inc.
6733 Myers Road
East Syracuse, NY 13057, USA
Phone: +1 315 437 5866
Fax: +1 315 437 5860
Email: info.us@jumo.net
Internet: www.jumousa.com

Flow monitor for disinfection measurands (type 202811/20)



Type 202811/20...

Brief description

Membrane-covered sensors for water disinfection (for instance, free chlorine or total chlorine, ozone, chlorine dioxide, etc. - see JUMO data sheets 202630 to 202637) must be operated with a minimum inflow of 15 cm/s. The flow monitor type 202811/20...is integrated in the measuring water supply, in line with the disinfection sensor, and monitors the required minimum inflow to the sensor.

Values measured by the sensors below the minimum inflow speed are too low. This can cause dangerous overdosage or underdosage in a connected regulating system. If values are measured above the minimum inflow speed, the measurement signal is only marginally influenced by the inflow speed.

The flow monitor consists of a flow unit, a needle valve insert for flow control, and an inductive proximity sensor, which is controlled by a float at medium flow. If the minimum inflow speed is reached or exceeded, the float lifts and the contact of the inductive proximity sensor switches. The contact, for instance, can be used to control a binary input for standard signals on the controller, JUMO AQUIS 500 AS. If the inflow is too low, the controller is moved to the "HOLD" status. This helps to avoid incorrect dosages.

Areas of application

- Flow monitoring using sensors for free chlorine, chlorine dioxide, ozone, hydrogen peroxide, or peracetic acid

Application example

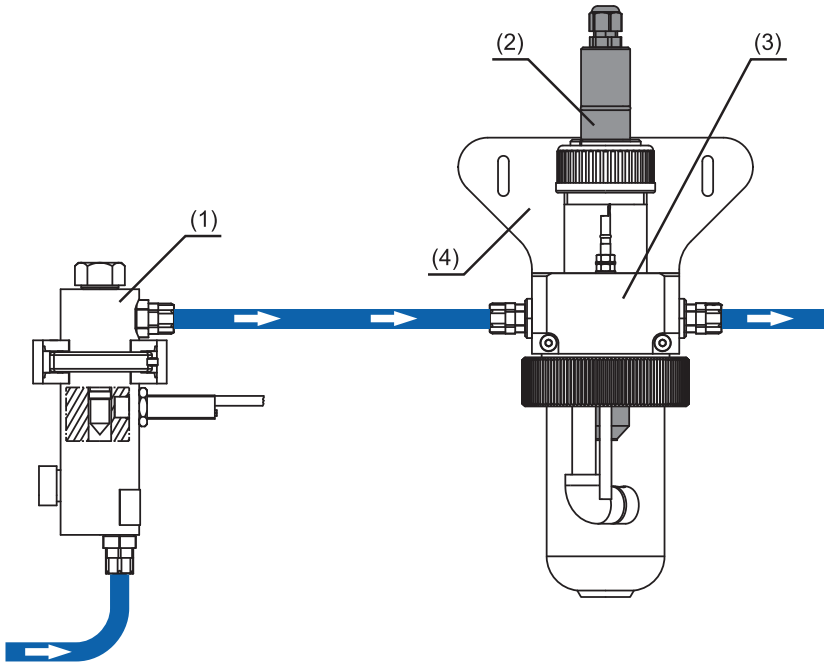

(1) Flow monitor, type 202811/20...

(2) Membrane-covered sensor, type 20263x/...

(3) Flow fitting for membrane-covered sensors, type 202811/30..., seechapter "Flow fitting for membrane-covered sensors (type 202811/30)", page 9

(4) Fixing bracket made from stainless steel, part no. 00455706

JUMO GmbH & Co. KG
Delivery address: Mackenrodtstraße 14
36039 Fulda, Germany
Postal address: 36035 Fulda, Germany
Phone: +49 661 6003-0
Fax: +49 661 6003-607
Email: mail@jumo.net
Internet: www.jumo.net

JUMO Instrument Co. Ltd.
JUMO House
Temple Bank, Riverway
Harlow, Essex, CM20 2DY, UK
Phone: +44 1279 63 55 33
Fax: +44 1279 62 50 29
Email: sales@jumo.co.uk
Internet: www.jumo.co.uk

JUMO Process Control, Inc.
6733 Myers Road
East Syracuse, NY 13057, USA
Phone: +1 315 437 5866
Fax: +1 315 437 5860
Email: info.us@jumo.net
Internet: www.jumousa.com

Technical data

Materials	Flow body: PMMA GS Fitting: POM, PVC, PP Floating body: Stainless steel 1.4571
Admissible medium temperature	0 to +60 °C
Admissible process pressure at +60 °C	4 bar 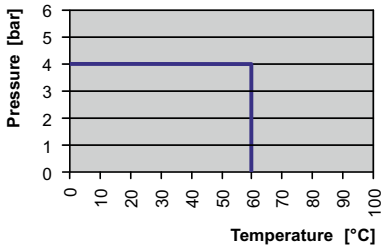
Process connection	Fitting G1/4 for hose 6 × 8 (inner Ø 6 mm, outer Ø 8 mm)
Weight	approx. 250 g

Inductive proximity sensor

Circuit diagram	Switching contact = NPN N/O contact (appearance = minimum inflow velocity not reached) 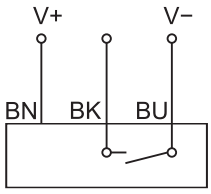
Operating voltage	DC 5 to 36 V
Current consumption without load	< 10 mA
Ampacity	200 mA
Voltage drop	< 1.5 V
Protection type	IP67

JUMO GmbH & Co. KG
Delivery address: Mackenrodtstraße 14
36039 Fulda, Germany
Postal address: 36035 Fulda, Germany
Phone: +49 661 6003-0
Fax: +49 661 6003-607
Email: mail@jumo.net
Internet: www.jumo.net

JUMO Instrument Co. Ltd.
JUMO House
Temple Bank, Riverway
Harlow, Essex, CM20 2DY, UK
Phone: +44 1279 63 55 33
Fax: +44 1279 62 50 29
Email: sales@jumo.co.uk
Internet: www.jumo.co.uk

JUMO Process Control, Inc.
6733 Myers Road
East Syracuse, NY 13057, USA
Phone: +1 315 437 5866
Fax: +1 315 437 5860
Email: info.us@jumo.net
Internet: www.jumousa.com

Dimensions

Flow monitor

Type 202811/20...

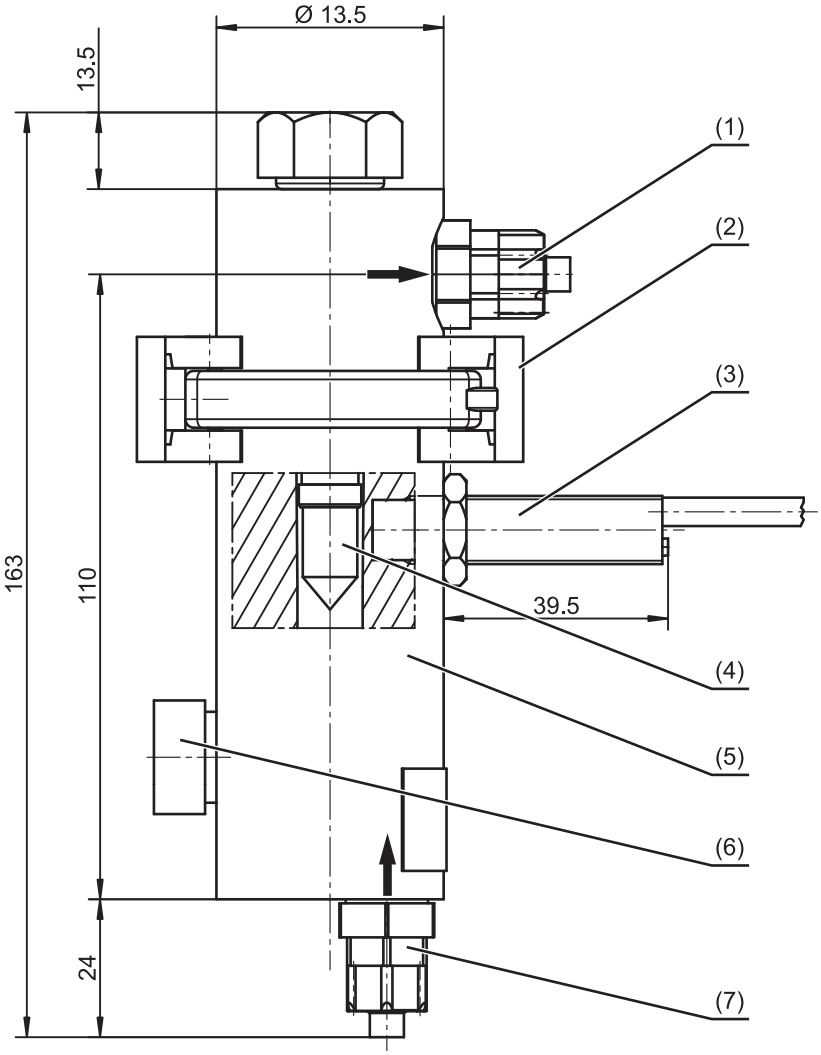

(1) Hose connection for measuring water outflow, connection G 1/4, for hose 6 × 8 (inner Ø 6 mm, outer Ø 8 mm)
(2) Pipe clip
(3) Inductive proximity sensor, M12 x 1 thread
(4) Floating body
(5) Flow body
(6) Needle valve insert for flow control
(7) Hose fitting for measuring water inflow, connection G 1/4, for pipe 6 × 8 (inner Ø 6 mm, outer Ø 8 mm)

JUMO GmbH & Co. KG
Delivery address: Mackenrodtstraße 14
36039 Fulda, Germany
Postal address: 36035 Fulda, Germany
Phone: +49 661 6003-0
Fax: +49 661 6003-607
Email: mail@jumo.net
Internet: www.jumo.net

JUMO Instrument Co. Ltd.
JUMO House
Temple Bank, Riverway
Harlow, Essex, CM20 2DY, UK
Phone: +44 1279 63 55 33
Fax: +44 1279 62 50 29
Email: sales@jumo.co.uk
Internet: www.jumo.co.uk

JUMO Process Control, Inc.
6733 Myers Road
East Syracuse, NY 13057, USA
Phone: +1 315 437 5866
Fax: +1 315 437 5860
Email: info.us@jumo.net
Internet: www.jumousa.com

Flow fitting for membrane-covered sensors (type 202811/30)

Brief description

The flow fitting is intended to hold an individual membrane-covered sensor as described in the data sheets 202630 to 202637. The fitting is generally mounted in the bypass and, thanks to its special design type, provides the correct inflow for the sensor.

The flow monitor type 202811/20....is recommended as an extension for monitoring the minimum inflow speed of a sensor.

The standard ground rod of the fitting enables the discharge of undesired electrical and electrostatic voltage potentials, which occur in complex plants and can distort the measured values.

Scope of application

- Protection fitting for sensors for chlorine, chlorine dioxide, ozone, etc. according to data sheets 202630 to 202637 in the drinking water and bathwater sector and for only slightly polluted process and cooling water



Type 202811/30...

JUMO GmbH & Co. KG
Delivery address: Mackenrodtstraße 14
36039 Fulda, Germany
Postal address: 36035 Fulda, Germany
Phone: +49 661 6003-0
Fax: +49 661 6003-607
Email: mail@jumo.net
Internet: www.jumo.net

JUMO Instrument Co. Ltd.
JUMO House
Temple Bank, Riverway
Harlow, Essex, CM20 2DY, UK
Phone: +44 1279 63 55 33
Fax: +44 1279 62 50 29
Email: sales@jumo.co.uk
Internet: www.jumo.co.uk

JUMO Process Control, Inc.
6733 Myers Road
East Syracuse, NY 13057, USA
Phone: +1 315 437 5866
Fax: +1 315 437 5860
Email: info.us@jumo.net
Internet: www.jumousa.com

Technical data

Materials	Case: PVC Measuring vessel: PC Seals: FPM
Admissible medium temperature	0 to +60 °C Deviating temperature range must be taken into account for the sensor utilized
Admissible process pressure at +60 °C	4 bar 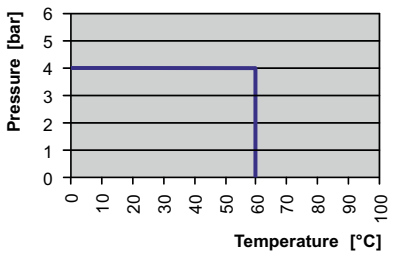 Deviating pressure range must be taken into account for the sensor utilized
Electrode holder	Fitting Pg 13.5 for 1 measured value transducer (dummy plugs included)
Process connection	G1/2A
Protection type	IP65, EN 60529
Weight	Approx. 900 g

JUMO GmbH & Co. KG
Delivery address: Mackenrodtstraße 14
36039 Fulda, Germany
Postal address: 36035 Fulda, Germany
Phone: +49 661 6003-0
Fax: +49 661 6003-607
Email: mail@jumo.net
Internet: www.jumo.net

JUMO Instrument Co. Ltd.
JUMO House
Temple Bank, Riverway
Harlow, Essex, CM20 2DY, UK
Phone: +44 1279 63 55 33
Fax: +44 1279 62 50 29
Email: sales@jumo.co.uk
Internet: www.jumo.co.uk

JUMO Process Control, Inc.
6733 Myers Road
East Syracuse, NY 13057, USA
Phone: +1 315 437 5866
Fax: +1 315 437 5860
Email: info.us@jumo.net
Internet: www.jumousa.com

Dimensions

Flow fitting

Type 202811/30...

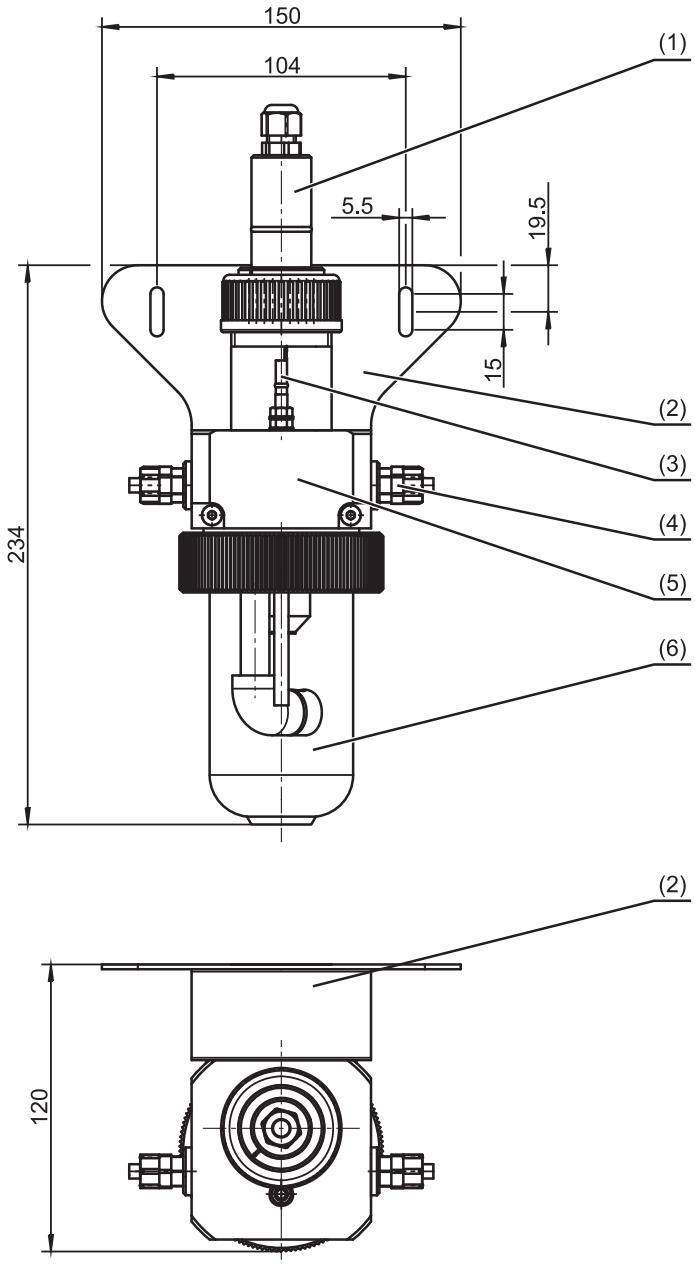

(1) Sensor
(2) Mounting bracket (optional)
(3) Ground pin
(4) Connection G 1/4, for hose 6 × 8 (inner Ø 6 mm, outer Ø 8 mm)
(5) Fitting
(6) Removable measuring vessel (inspection glass)

JUMO GmbH & Co. KG
Delivery address: Mackenrodtstraße 14
36039 Fulda, Germany
Postal address: 36035 Fulda, Germany
Phone: +49 661 6003-0
Fax: +49 661 6003-607
Email: mail@jumo.net
Internet: www.jumo.net

JUMO Instrument Co. Ltd.
JUMO House
Temple Bank, Riverway
Harlow, Essex, CM20 2DY, UK
Phone: +44 1279 63 55 33
Fax: +44 1279 62 50 29
Email: sales@jumo.co.uk
Internet: www.jumo.co.uk

JUMO Process Control, Inc.
6733 Myers Road
East Syracuse, NY 13057, USA
Phone: +1 315 437 5866
Fax: +1 315 437 5860
Email: info.us@jumo.net
Internet: www.jumousa.com

Order details

	(1)	**Basic type**
202811/10		Combination fitting for mounting electrochemical sensors
202811/20		Flow monitor for disinfection measurands
202811/30		Flow fitting for membrane-covered sensors
	(2)	**Equipment 1**
0000		without temperature probe
1003		integrated Pt100 temperature probe, electrical connection M12 (4-pin)[a]
	(3)	**Equipment 2**
00		without flow monitor
10		with flow monitor, fixed cable connection 2 m with tin-plated wire ends[b]
	(4)	**Process connection**
308		Screw connection G 1/4 with connection for hose 6×8 (inner Ø 6 mm, outer Ø 8 mm)
	(5)	**Extra codes**
000		Without
055		Ground pin[c]

[a] Only possible with type 202811/10.

[b] Not possible for type 202811/30.

[c] Not possible for type 202811/20.

	(1)		(2)		(3)		(4)		(5)
Order code		-		-		-		/	
Order example	202811/10	-	1003	-	10	-	308	/	055

Important information:

The order code is not modular. When placing orders, if possible please select the items listed under **"Stock versions"** or **"Production versions"**.
We must check the technical feasibility of and approve freely chosen combinations of individual code parts.

JUMO GmbH & Co. KG
Delivery address: Mackenrodtstraße 14
36039 Fulda, Germany
Postal address: 36035 Fulda, Germany
Phone: +49 661 6003-0
Fax: +49 661 6003-607
Email: mail@jumo.net
Internet: www.jumo.net

JUMO Instrument Co. Ltd.
JUMO House
Temple Bank, Riverway
Harlow, Essex, CM20 2DY, UK
Phone: +44 1279 63 55 33
Fax: +44 1279 62 50 29
Email: sales@jumo.co.uk
Internet: www.jumo.co.uk

JUMO Process Control, Inc.
6733 Myers Road
East Syracuse, NY 13057, USA
Phone: +1 315 437 5866
Fax: +1 315 437 5860
Email: info.us@jumo.net
Internet: www.jumousa.com

Scope of delivery

1 combination fitting/flow monitor/flow fitting in the version ordered
1 operating manual[a]

[a] Not for type 202811/30.

Stock versions

(Delivery within 3 working days after receipt of order)

Type	Part no.
202811/10-1003-10-308/055[a]	00607325
202811/20-0000-10-308/000	00605507
202811/30-0000-00-308/055	00392611

[a] Mini ball valve included.

Accessories

(Delivery within 10 working days after receipt of order)

Connecting cables for temperature probe

Description	Parts no.
PVC connecting cable, length 2 m, with 4-pin M12 cable socket (straight)	00404585
PVC connecting cable, length 5 m, with 5-pin M12 cable socket (straight)	00337625

Other

Description	Parts no.
Sealing set with 9 replacement seals, for type 202811/10...	00618085
Mini ball valve made from PVC for sampling, for type 202811/10...	00402210
Mounting bracket for flow fitting (type 202811/30)	00455706